VGRT302AFTER07-09-07

000837-000 1
BURNER BOX INTERIOR 2
CONTROL AREA 3
IGNITER WIRES 4
PE070889 5
SURFACE COOKING AREA 6
WIRING DIAGRAM 7
Appendix A:Pages Index . . . . . A
Appendix B:Parts Index . . . . . B

000837-000

1

Item	Part No.	Name	Qty	Uom	NOTES
1	000837-000	VGRT SUPPLY CORD JUMPER	1	EA	Not available online / Call for pricing and availability
Not Shown	NOTE	(BEFORE 10/4/11)		EA	
1	027347-000	SUPPLY CORD JUMPER	1	EA	
Not Shown	NOTE	(ON OR AFTER 10/4/11)		EA	

BURNER BOX INTERIOR

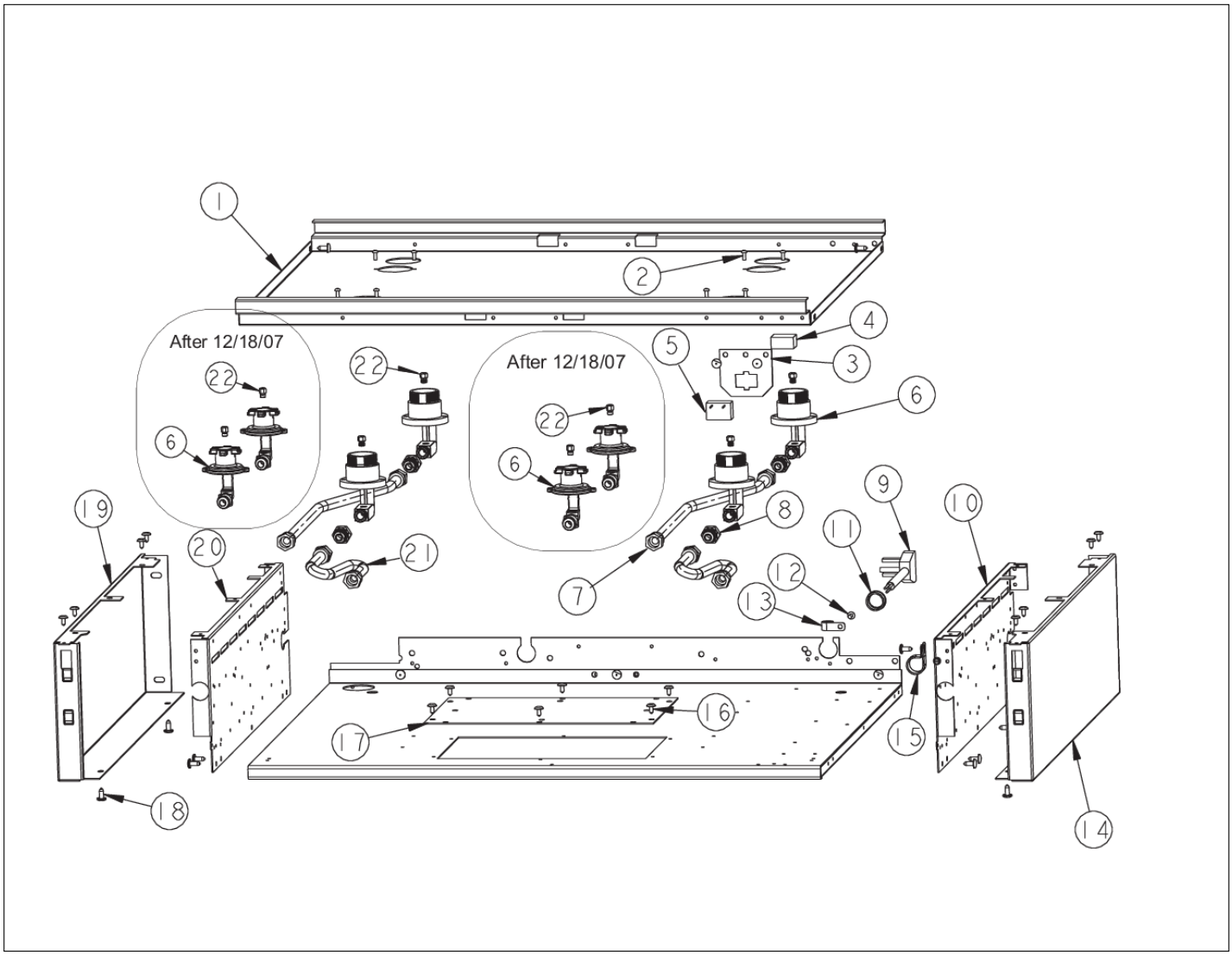

Item	Part No.	Name	Qty	Uom	NOTES
1	A2007852	BURNER SUPPORTS	1	EA	
2	PD020076	6-32 X 3/8" PHILL PAN MS	1	EA	
3	A1008487	SERVICE DISCONNECT BRACKET	1	EA	
4	PE070071	Disconnect Block - Female	1	EA	
5	000573-000	POWER JUMPER WIRE	1	EA	
6	PA080075	Burner Body	1	EA	
Not Shown	NOTE	(Before 12/18/07)		EA	
Not Shown	001394-042	15000 BTU NAT JETHOLDER	1	EA	
Not Shown	NOTE	(After 12/18/07)		EA	
Not Shown	001394-043	13500 BTU LP JETHOLDER	1	EA	
Not Shown	NOTE	(After 12/18/07)		EA	
7	PB020193	16" FLEX TUBING W/CONNECTORS	1	EA	
8	PA050086	5/8" MALE FLARE FITTING	1	EA	Not available online / Call for pricing and availability
9	PE070128	Supply Cord	1	EA	
10	A2006747	Burner Box Side - RH	1	EA	
11	PD040005	SNAP BUSHING - 7/8"	1	EA	
12	PD020010	10 X 3/8 GREEN GROUNDING SCREW	1	EA	
13	PD030148	CLAMP CABLE ALUMINUM .500 DIA.	1	EA	
14	B2007856	Side Panel - RH	1	EA	
15	PD030109	INSULATED CLAMP	1	EA	
16	PD020032	SRW-8(A)X3/8"PH.WFR HD 7/16DIA*NICL	1	EA	
17	A1006344	DOOR LOCK ACCESS PANEL 48"	1	EA	NO LONGER AVAILABLE
18	PD020002	10 X 1/2 PH.TR.HD.SMS.	1	EA	
19	B2007857	Side Panel - LH	1	EA	
20	A2006748	Burner Box Side - LH	1	EA	

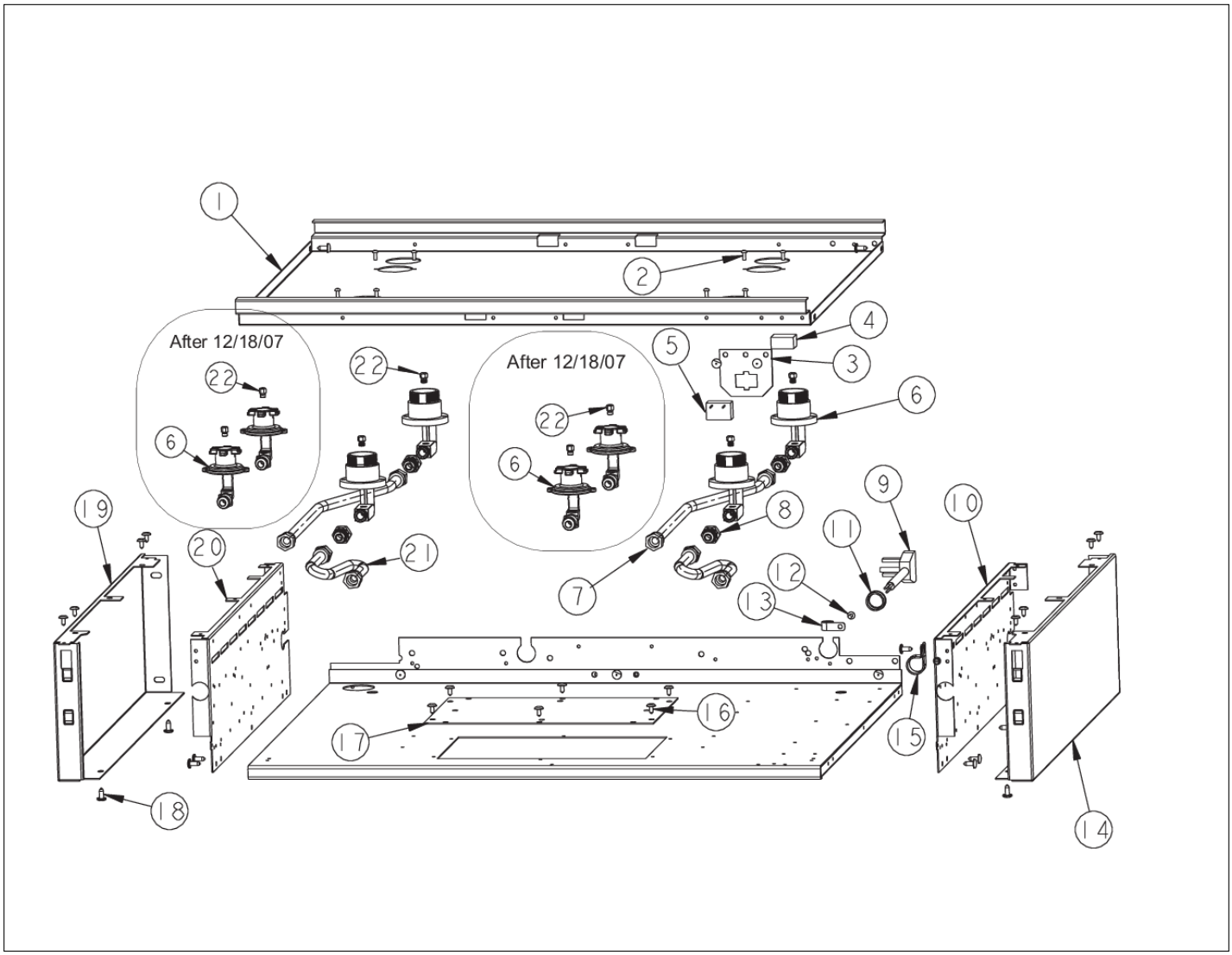
1
2
3
4
5
6
7
8
9
10
11
12
13
14
15
16
17
18
19
20
21
22
After 12/18/07
After 12/18/07

Item	Part No.	Name	Qty	Uom	NOTES
21	PB020192	10" FLEX TUBING W/CONNECTORS	1	EA	
22	PB040194	Orifice - Nat.	1	EA	
Not Shown	NOTE	(Before 12/18/07)		EA	
Not Shown	001396-040	15K NG ORIFICE	1	EA	
Not Shown	NOTE	(After 12/18/07)		EA	
Not Shown	PB040217	L.P. ORIFICE	1	EA	
Not Shown	NOTE	(Before 12/18/07)		EA	
Not Shown	001396-044	13.5K LP ORIFICE	1	EA	
Not Shown	NOTE	(After 12/18/07)		EA	

CONTROL AREA

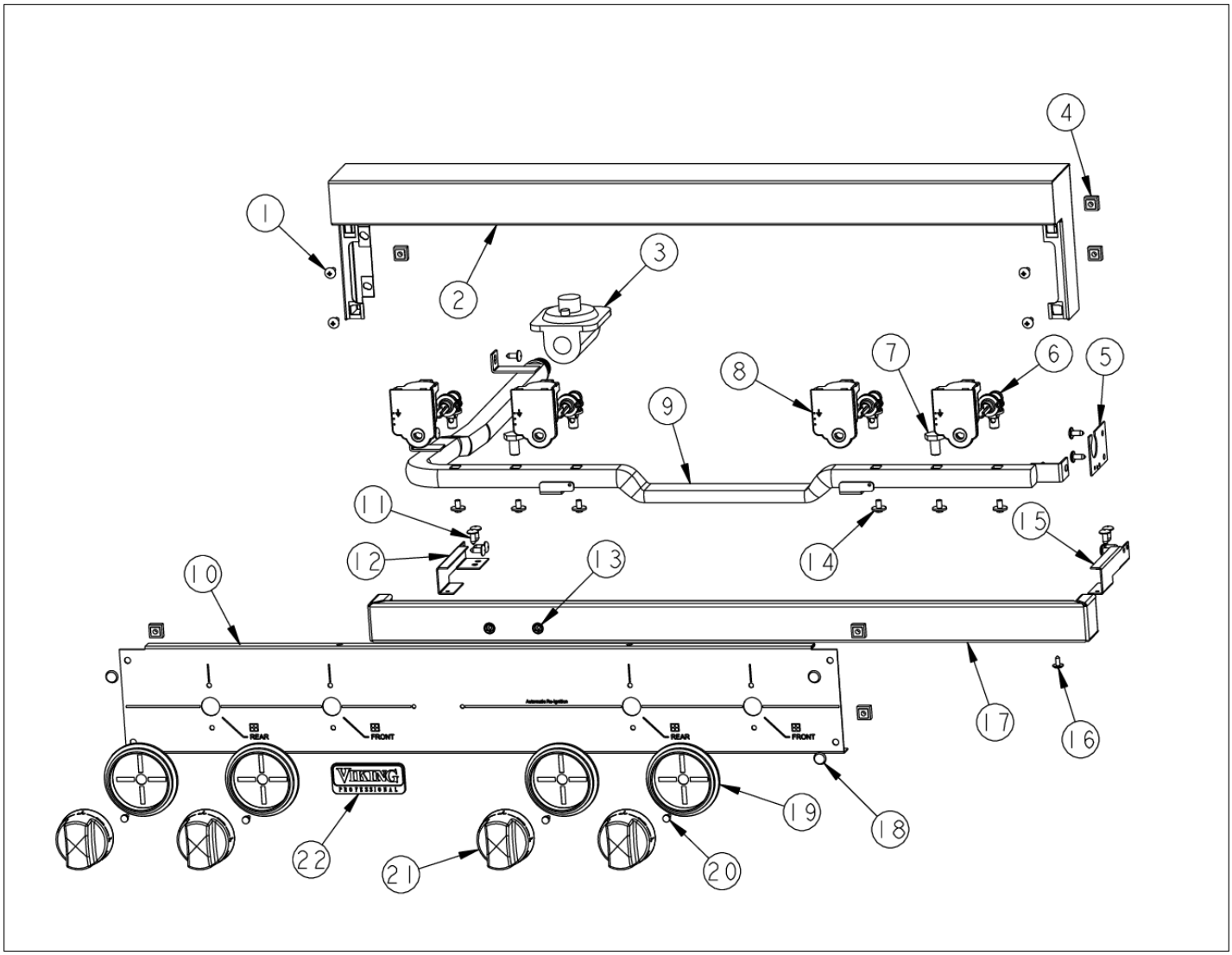

Item	Part No.	Name	Qty	Uom	NOTES
1	PD010003	10-24 X 1/2 PH.TR.HD.SERD.M.S.	1	EA	
2	G3006766	SEALED LANDING LEDGE ASSY	1	EA	
3	PA070003	PRESSURE REGULATOR	1	EA	
4	PD030005	SELF RETAINING NUT	1	EA	
5	A1001138	MANIFOLD BRKT	1	EA	NO LONGER AVAILABLE, Not available online / Call for pricing and availability
6	003517-000	PA010158 VALVE AND BOLT KIT	1	EA	
7	PA010012	ROPER PLUG	1	EA	
8	PA020058	IRIS SINGLE SPARK MODULE	1	EA	
9	002156-000	30" UNIVERSAL MANIFOLD	1	EA	
10	B9201332	CTRL PAN-VGRT300-4BSS *SLK SCR*	1	EA	
Not Shown	C9201332AL	CTRL PAN- *AL* (VGRT300-4B)*SLK S	1	EA	NO LONGER AVAILABLE, Not available online / Call for pricing and availability
Not Shown	C9201332BK	CTRL PAN- *BK* (VGRT300-4B)*SLK S	1	EA	NO LONGER AVAILABLE, Not available online / Call for pricing and availability
Not Shown	C9201332BT	CONTROL PANEL VGRT300-4B *BT* SILK SCR	1	EA	NO LONGER AVAILABLE, Not available online / Call for pricing and availability
Not Shown	C9201332BU	CONTROL PANEL VGRT300-4B *BU* SILK SCR	1	EA	NO LONGER AVAILABLE, Not available online / Call for pricing and availability
Not Shown	C9201332CB	CONTROL PANEL VGRT300-4B *CB* SILK SCR	1	EA	NO LONGER AVAILABLE, Not available online / Call for pricing and availability
Not Shown	C9201332EP	CONTROL PANEL VGRT300-4B *EP* SILK SCR	1	EA	NO LONGER AVAILABLE, Not available online / Call for pricing and availability

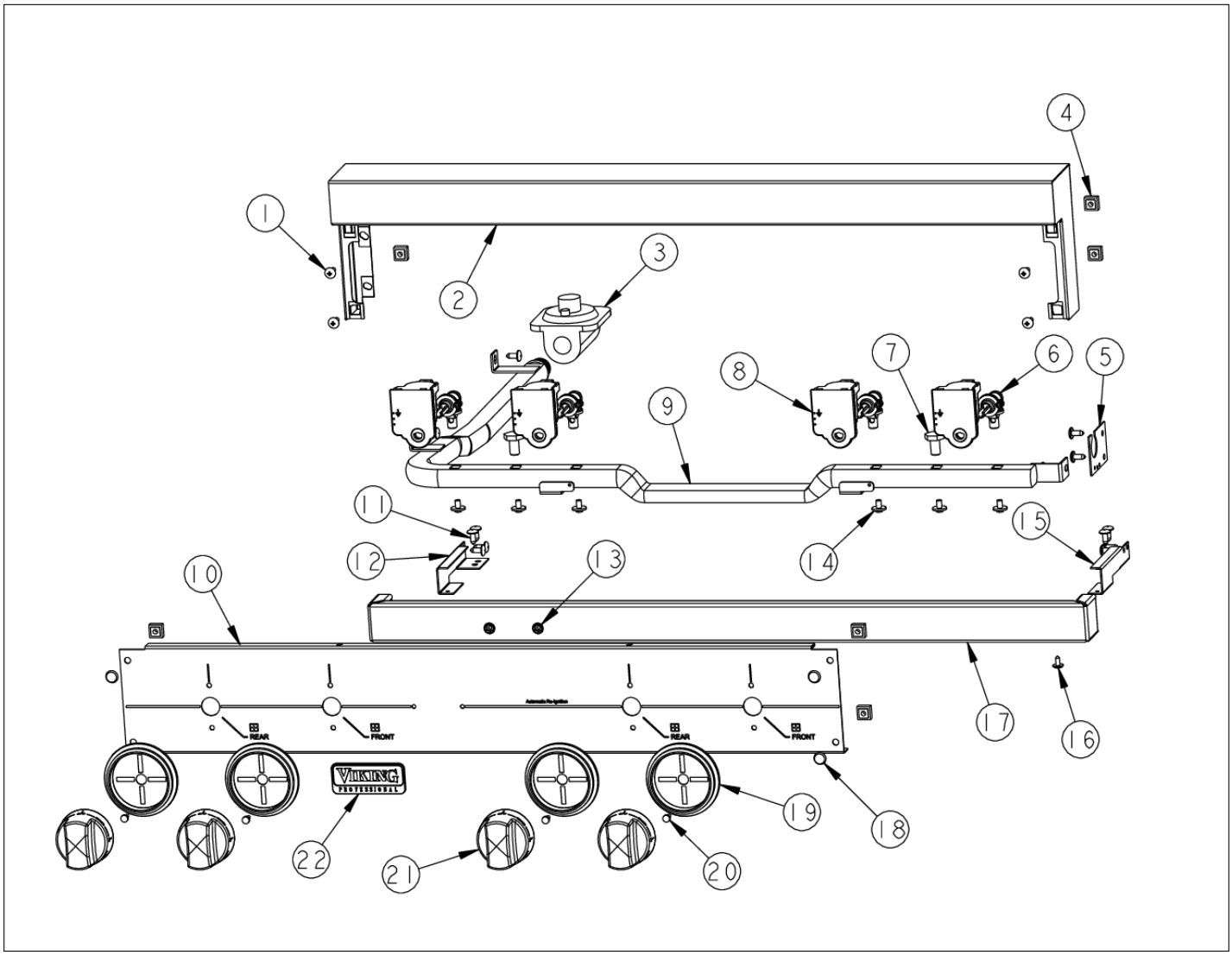
1
2
3
4
5
6
7
8
9
10
11
12
13
14
15
16
17
18
19
20
21
22
REAR
FRONT
REAR
FRONT
VIKING
PROFESSIONAL

Item	Part No.	Name	Qty	Uom	NOTES
Not Shown	C9201332FG	CONTROL PANEL VGRT300-4B *FG* SILK SCR	1	EA	NO LONGER AVAILABLE, Not available online / Call for pricing and availability
Not Shown	C9201332GG	CONTROL PANEL VGRT300-4B *GG* SILK SCR	1	EA	NO LONGER AVAILABLE, Not available online / Call for pricing and availability
Not Shown	C9201332LE	CONTROL PANEL VGRT300-4B *LE* SILK SCR	1	EA	NO LONGER AVAILABLE, Not available online / Call for pricing and availability
Not Shown	C9201332MJ	CONTROL PANEL VGRT300-4B *MJ* SILK SCR	1	EA	NO LONGER AVAILABLE, Not available online / Call for pricing and availability
Not Shown	C9201332SG	CONTROL PANEL VGRT300-4B *SG* SILK SCR	1	EA	NO LONGER AVAILABLE, Not available online / Call for pricing and availability
Not Shown	C9201332VB	CONTROL PANEL VGRT300-4B *VB* SILK SCR	1	EA	NO LONGER AVAILABLE, Not available online / Call for pricing and availability
Not Shown	C9201332WH	CTRL PAN- *WH* (VGRT300-4B)*SLK S	1	EA	NO LONGER AVAILABLE
11	PD020002	10 X 1/2 PH.TR.HD.SMS.	1	EA	
12	A20011466	FALSE DRIP TRAY HANDLE BRKT. LH	1	EA	NO LONGER AVAILABLE
13	PD030006	CAPPED WASHER PAL NUT	1	EA	
14	PD010012	1/4 x 3/8 VALVE BOLT	1	EA	
15	A20011467	FALSE DRIP TRAY HANDLE BRKT. RH	1	EA	NO LONGER AVAILABLE
16	PD020032	SRW-8(A)X3/8"PH.WFR HD 7/16DIA*NICL	1	EA	
17	B30011468	FALSE DRIP TRAY HANLDE (WELDED) - 30"	1	EA	NO LONGER AVAILABLE
Not Shown	G93011458PVD	DRIP TRAY HANDLE ASSY 30" PVD	1	EA	Not available online / Call for pricing and availability
18	PD020033	SRW-#10-24X1/2"T(23)PH.WFR HD (NKL)	1	EA	

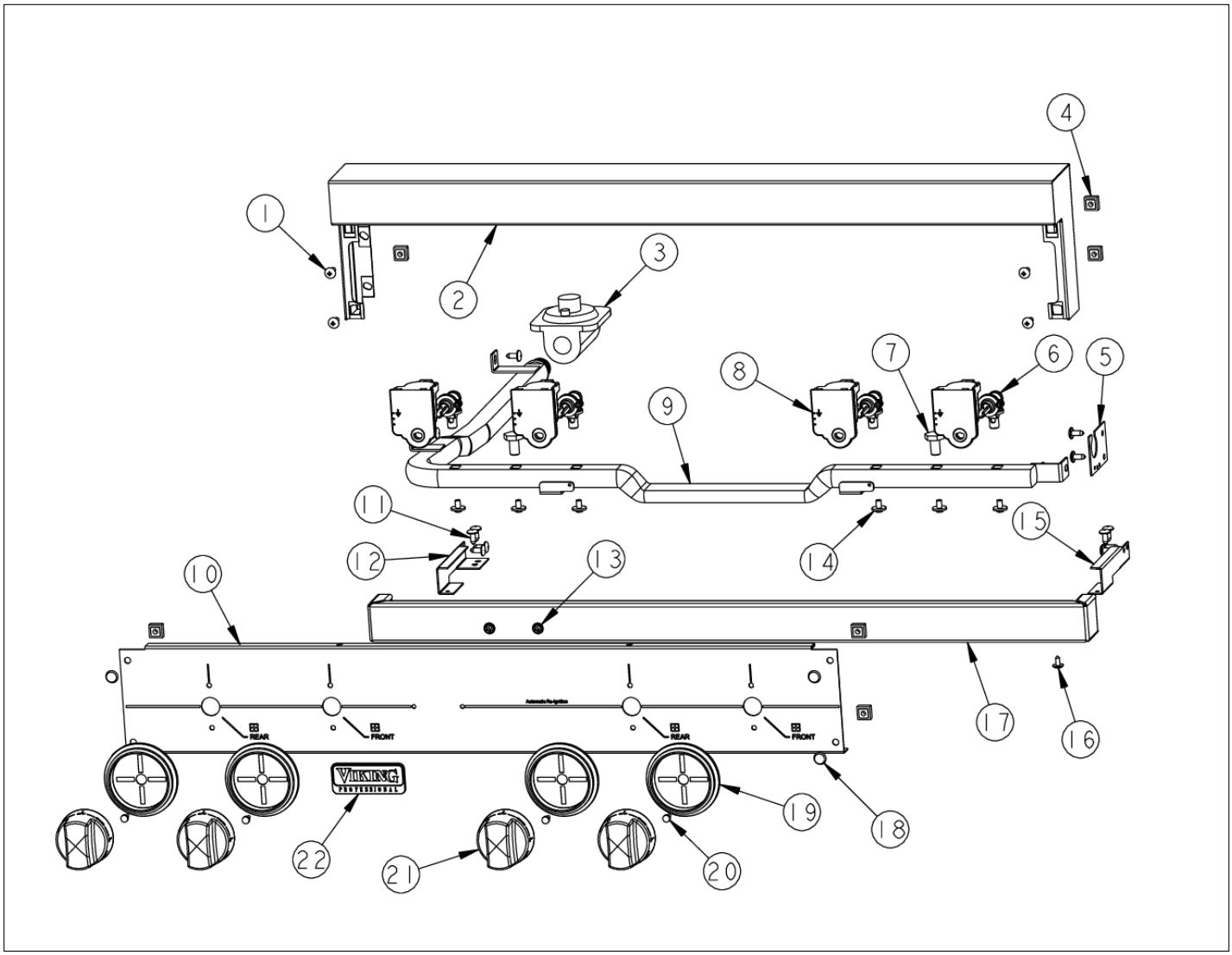
1
2
3
4
5
6
7
8
9
10
11
12
13
14
15
16
17
18
19
20
21
22
REAR
FRONT
REAR
FRONT
VIKING
PROFESSIONAL

Item	Part No.	Name	Qty	Uom	NOTES
19	050172-000	BEZEL, KNOB	1	EA	
Not Shown	PB010209	Bezel - BR	1	EA	
20	PD020067	' #6 X 3/8" PAN PHIL. TEK *SS*	1	EA	
21	PB010206	TOP BURNER KNOB BK	1	EA	
Not Shown	PB010207	TOP BURNER KNOB WH	1	EA	Not available online / Call for pricing and availability
22	PE010142	3" VIKING LOGO BLACK/CHROME	1	EA	
Not Shown	PE010143	3" LOGO BK/BR	1	EA	
Not Shown	PE010144	3" LOGO *WH*CHROME	1	EA	NO LONGER AVAILABLE
Not Shown	PE010145	LOGO - WH / BR	1	EA	

IGNITER WIRES

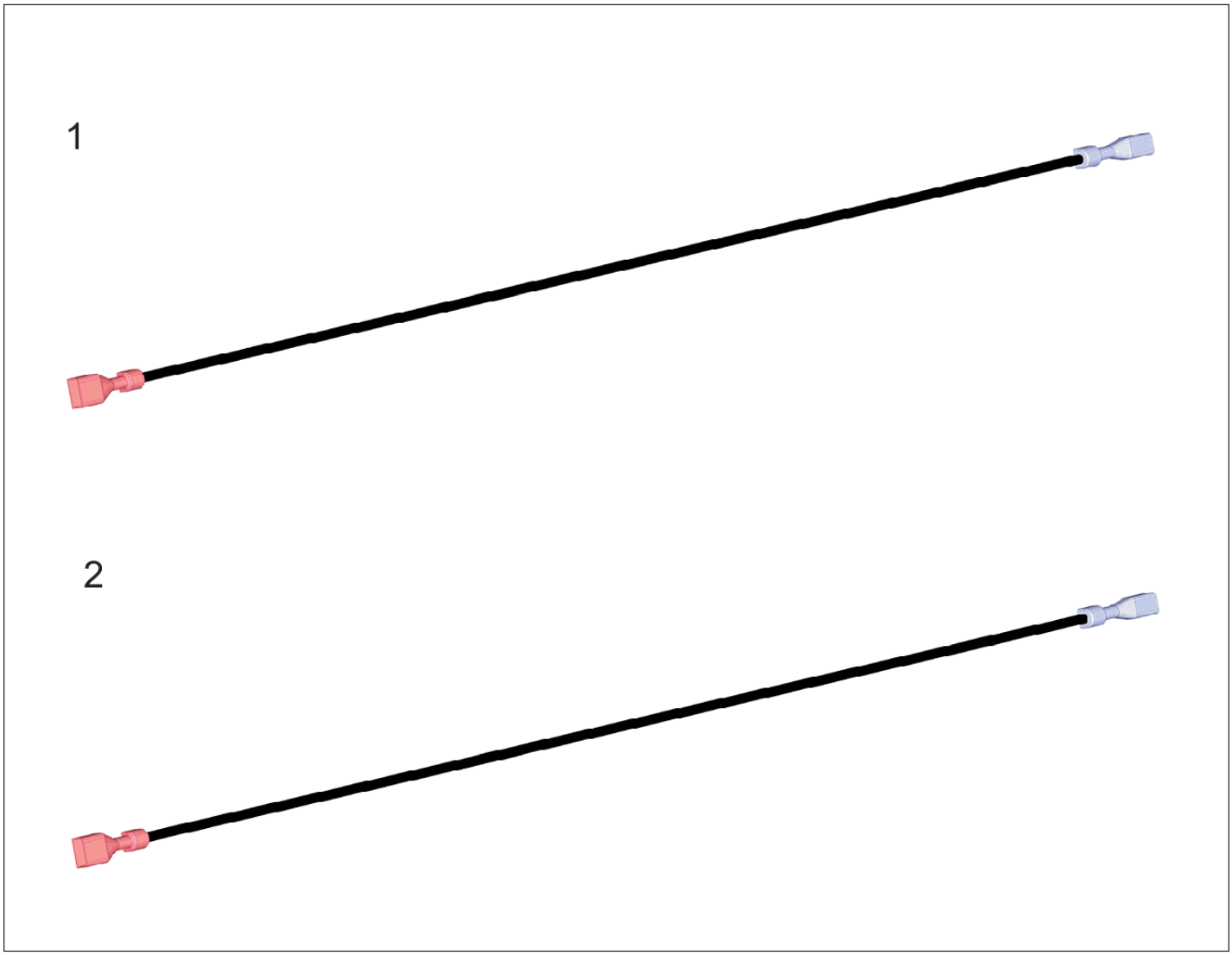

Item	Part No.	Name	Qty	Uom	NOTES
1	000647-000	IRIS IGNITOR WIRE, FRONT BURNER	1	EA	
2	006766-000	IRIS IGNITOR WIRE, BACK BURNER	1	EA	

1

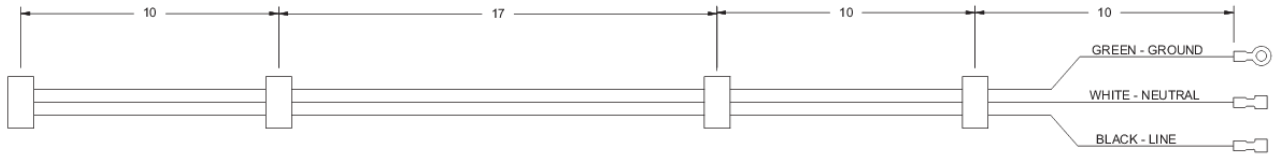

Item	Part No.	Name	Qty	Uom	NOTES
1	PE070889	IRIS HARNESS (24"/30")	1	EA	

SURFACE COOKING AREA

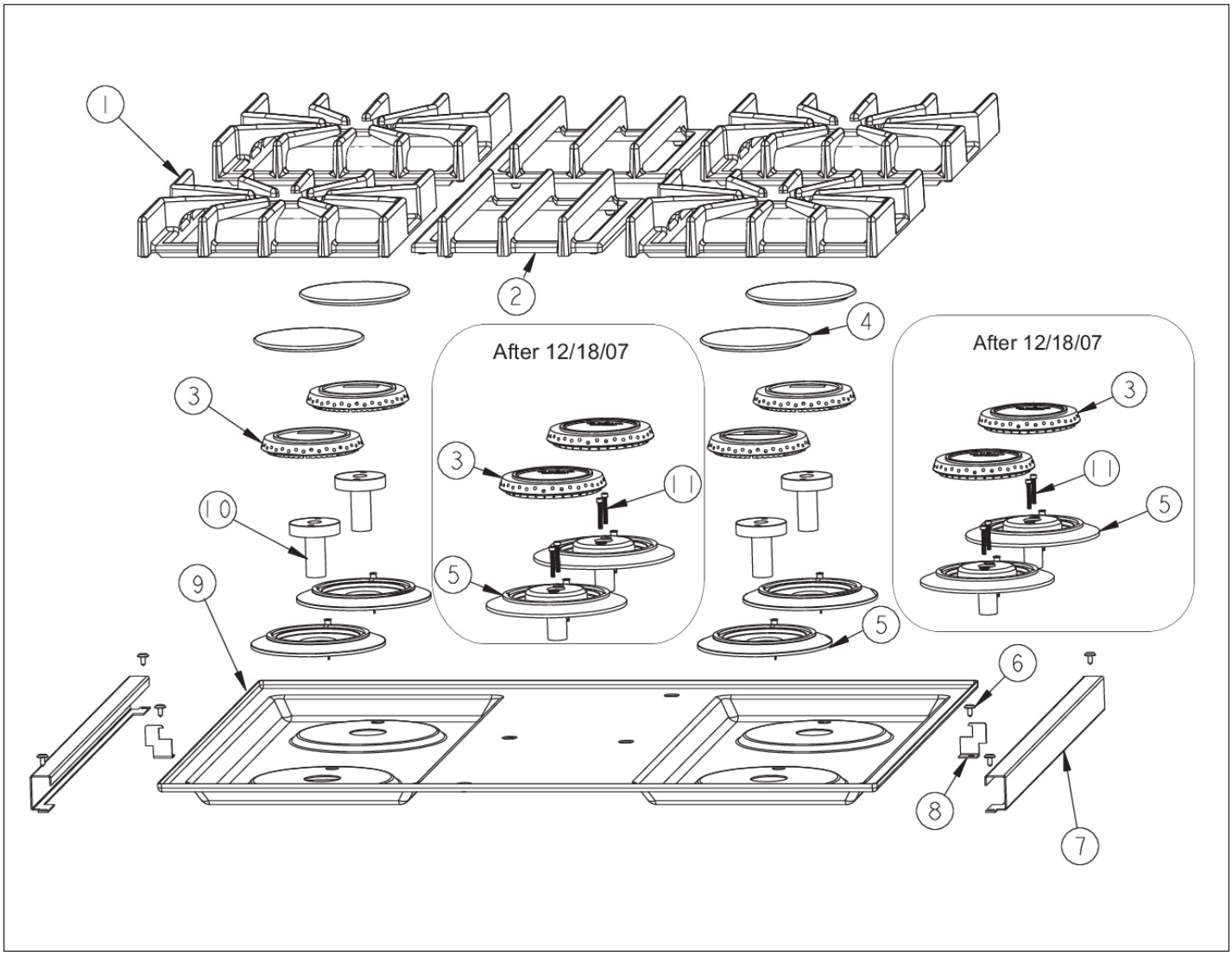

Item	Part No.	Name	Qty	Uom	NOTES
1	PA060054	Burner Grate - BK	1	EA	
2	PA060060	SEALED COOKTOP CENTER GRATE *BK*	1	EA	
3	PB050063	Burner Head	1	EA	
Not Shown	NOTE	(Before 12/18/07)		EA	
001386-000	018200-000	ADJUSTED SEALED BURNER HEAD	1	EA	
Not Shown	NOTE	(After 12/18/07)		EA	
4	PA080083	D BURNER CAP *MATTE BLACK*	1	EA	
5	PB050081	BURNER BASE ASM	1	EA	
Not Shown	NOTE	(INCLUDES IGNITER) - BEFORE 12/18/07		EA	
Not Shown	003322-040	SEALED BURNER BASE, TURNED FINISH	1	EA	
Not Shown	NOTE	(INCLUDES IGNITER) - AFTER 12/18/07		EA	
6	PD020032	SRW-8(A)X3/8"PH.WFR HD 7/16DIA*NICL	1	EA	
7	B2007851	Side Trim - SS	1	EA	
Not Shown	C9307851BR	Side Trim - BR	1	EA	Not available online / Call for pricing and availability
8	A2007858	SIDE TRIM BRKT	1	EA	
9	E9107413BK	MAIN TOP 30" *BK*	1	EA	
Not Shown	E9107413WH	MAIN TOP 30" *WH*	1	EA	
10	PA010100	Burner Venturi	1	EA	
Not Shown	NOTE	(Before 12/18/07)		EA	
11	009197-000	#6-32 X 5/8 18-8 SS NC SOC CAP	1	EA	
Not Shown	NOTE	(After 12/18/07)		EA	

WIRING DIAGRAM

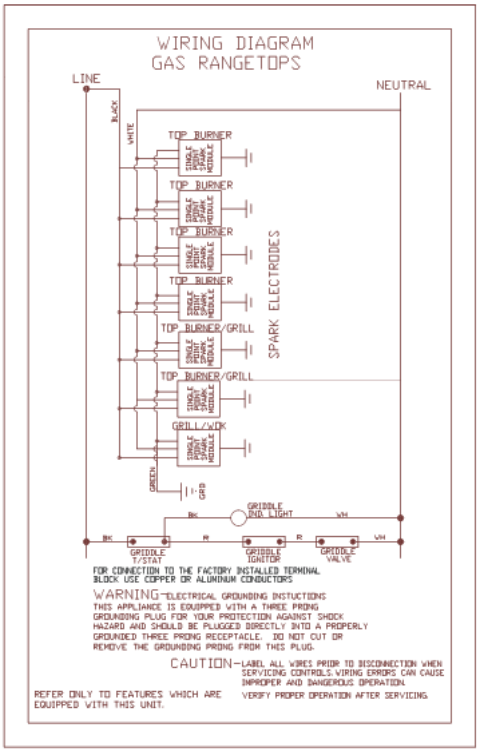

Appendix A:Pages Index

000837-000 1
BURNER BOX INTERIOR 2
CONTROL AREA 3
IGNITER WIRES 4
PE070889 5
SURFACE COOKING AREA 6
WIRING DIAGRAM 7

Appendix B:Parts Index

000573-000 2
000647-000 4
000837-000 1
001394-042 2
001394-043 2
001396-040 2
001396-044 2
002156-000 3
003322-040 6
003517-000 3
006766-000 4
009197-000 6
018200-000 6
027347-000 1
050172-000 3
A1001138 3
A1006344 2
A1008487 2
A20011466 3
A20011467 3
A2006747 2
A2006748 2
A2007852 2
A2007858 6
B2007851 6
B2007856 2
B2007857 2
B30011468 3
B9201332 3
C9201332AL 3
C9201332BK 3
C9201332BT 3
C9201332BU 3
C9201332CB 3
C9201332EP 3
C9201332FG 3
C9201332GG 3
C9201332LE 3
C9201332MJ 3
C9201332SG 3
C9201332VB 3
C9201332WH 3
C9307851BR 6
E9107413BK 6
E9107413WH 6
G3006766 3
G93011458PVD 3
PA010012 3
PA010100 6
PA020058 3
PA050086 2
PA060054 6
PA060060 6
PA070003 3
PA080075 2
PA080083 6
PB010206 3
PB010207 3
PB010209 3
PB020192 2
PB020193 2
PB040194 2
PB040217 2
PB050063 6
PB050081 6
PD010003 3
PD010012 3
PD020002 . . . . . 2, 3
PD020010 2
PD020032 . . . . . 2, 3, 6
PD020033 3
PD020067 3
PD020076 2
PD030005 3
PD030006 3
PD030109 2
PD030148 2
PD040005 2
PE010142 3
PE010143 3
PE010144 3

PE010145 3
PE070071 2
PE070128 2
PE070889 5