VGBQ3002RE

BURNER GRATE AREA 1
CANOPY ASSEMBLY 2
CONTROL AREA 3
DRIP TRAY 4
GRILL BURNER BOX AREA 5
LP REGULATOR ASSEMBLY 6
NATURAL GAS REGULATOR ASSEMBLY 7
PE070816 WIRING HARNESS 8
ROTISSERIE BURNER AREA 9
ROTISSERIE MOTOR 10
UPPER GRILL AREA 11
Appendix A:Pages Index . . . . . A
Appendix B:Parts Index . . . . . B

BURNER GRATE AREA

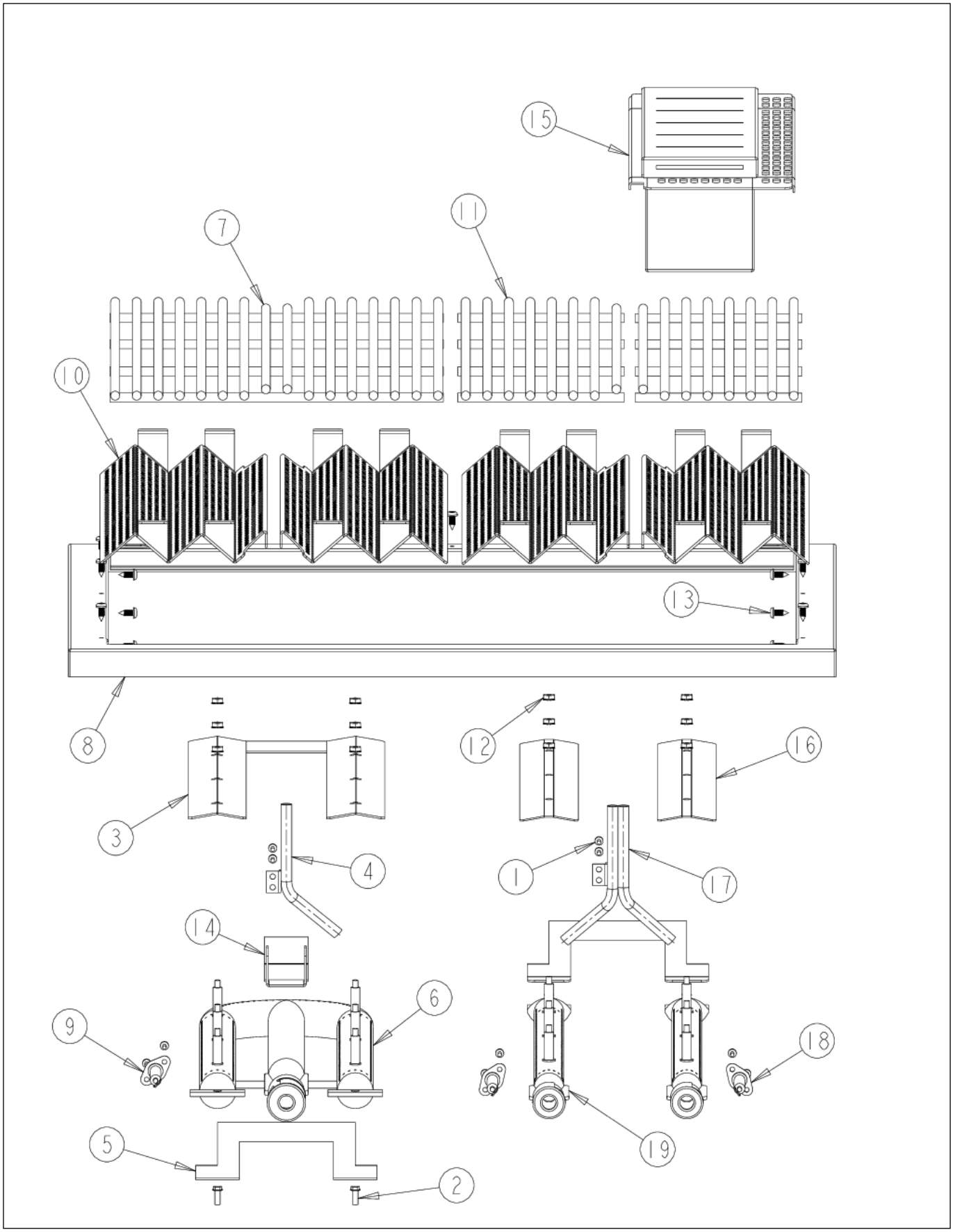

Item	Part No.	Name	Qty	Uom	NOTES
1	PD020067	' #6 X 3/8" PAN PHIL. TEK *SS*		EA	
2	PD020048	NO.10 X 1/2 TEK 410 SS SCREW		EA	
3	B2004921	Burner Drip Shield		EA	
Comments for Part Num. B2004921 vharding68@verizon.net on Jul 25, 2017 PART NUMBER FOR THE NUTS (TOTAL 18) FOR ALL 4 SHIELDS IS PD030060 KEPS NUT (10-32) I BELIEVE THE PD030044 KEPS NUT (10-24) ARE FOR A DIFFERENT PART OF THE UNIT.					
4	PB020114	FLASH TUBE (VGBQ3002T)		EA	
5	B2005248	FRONT BURNER BRACKET (PHASE 2)		EA	
6	PA080050	Grill Burner		EA	
7	PA060052	Full Grill Grate	1	EA	
7	PA060068	FULL GRATE *SS*	1	EA	
8	B20015516	GRILL FRAME 30"		EA	
9	008090-000	PB040287 IGNITOR KIT		EA	
10	PK010061	1/2 Flavor Grid		EA	
11	PA060053	1/2 Grill Grate	2	EA	
11	PA060069	Half Grate SS	2	EA	
12	PD030060	#10-32 KEPS NUT SS		EA	
13	PD020055	' #10 X 1/2" PAN PHIL. TEK.*SS*		EA	
14	B2005249	REAR BURNER BRACKET (PHASE 2)		EA	
15	027596-000	BOX, SMOKER ASM		EA	
16	B2005324	Burner Drip Shield		EA	
17	PB020115	SMOKER FLASH TUBE		EA	
18	008091-000	PB040288 IGNITOR KIT		EA	
19	PA080051	Smoker Burner		EA	

CANOPY ASSEMBLY

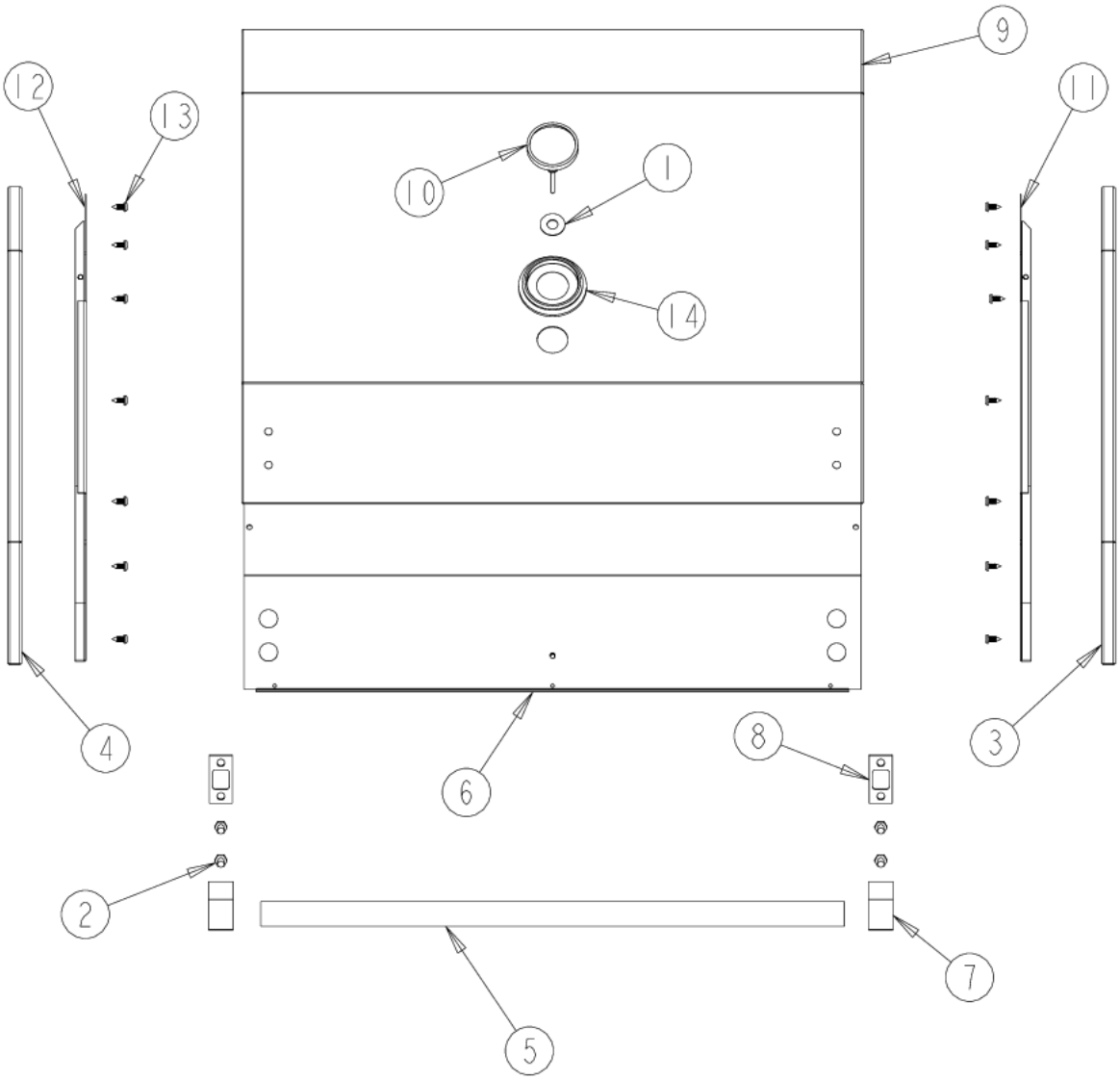

Item	Part No.	Name	Qty	Uom	NOTES
1	PD040166	GRILL THERMO SPACER	1	EA	
2	PD020069	CAP SCREW 1/4-20 X 3/4 SS	1	EA	
3	B3005292	CANOPY END RH (PHASE 2)	1	EA	
4	B3005293	CANOPY END LH (PHASE 2)	1	EA	
5	PE030041	DOOR HANDLE (CANOPY) *SS* (VGBQ30)	1	EA	
NI	PE030045PVD	CANOPY HANDLE (30") PVD	1	EA	NO LONGER AVAILABLE, Not available online / Call for pricing and availability
6	B2005301	CANOPY HEAT SHIELD - (PHASE 2)	1	EA	
7	000268-000	HANDLE ENDCAP	1	EA	
NI	PE030001PVD	END CAP DOOR HANDLE *BR	1	EA	
8	PD040010	DOOR HANDLE SPACER	1	EA	
9	B2005298	GRILL CANOPY 30 (PHASE 2)	1	EA	
10	PB010337	GRILL THERMOMETER	1	EA	
11	B2005294	INSIDE CANOPY END RH (PHASE 2)	1	EA	Not available online / Call for pricing and availability
12	B2005295	INSIDE CANOPY LH (PHASE 2)	1	EA	Not available online / Call for pricing and availability
13	PD020055	' #10 X 1/2" PAN PHIL. TEK.*SS*	1	EA	
14	PB010192	THERMOSTAT BEZEL	1	EA	
NI	PB010212	THERMOSTAT BEZEL BRASS	1	EA	
NI	G3205304SS	CANOPY ASSY 30 (P2 GRILL) *SS*	1	EA	
NI	G3205304SSBR	CANOPY ASSY 30 (P2 GRILL) *SS*BR*	1	EA	NO LONGER AVAILABLE, Not available online / Call for pricing and availability

CONTROL AREA

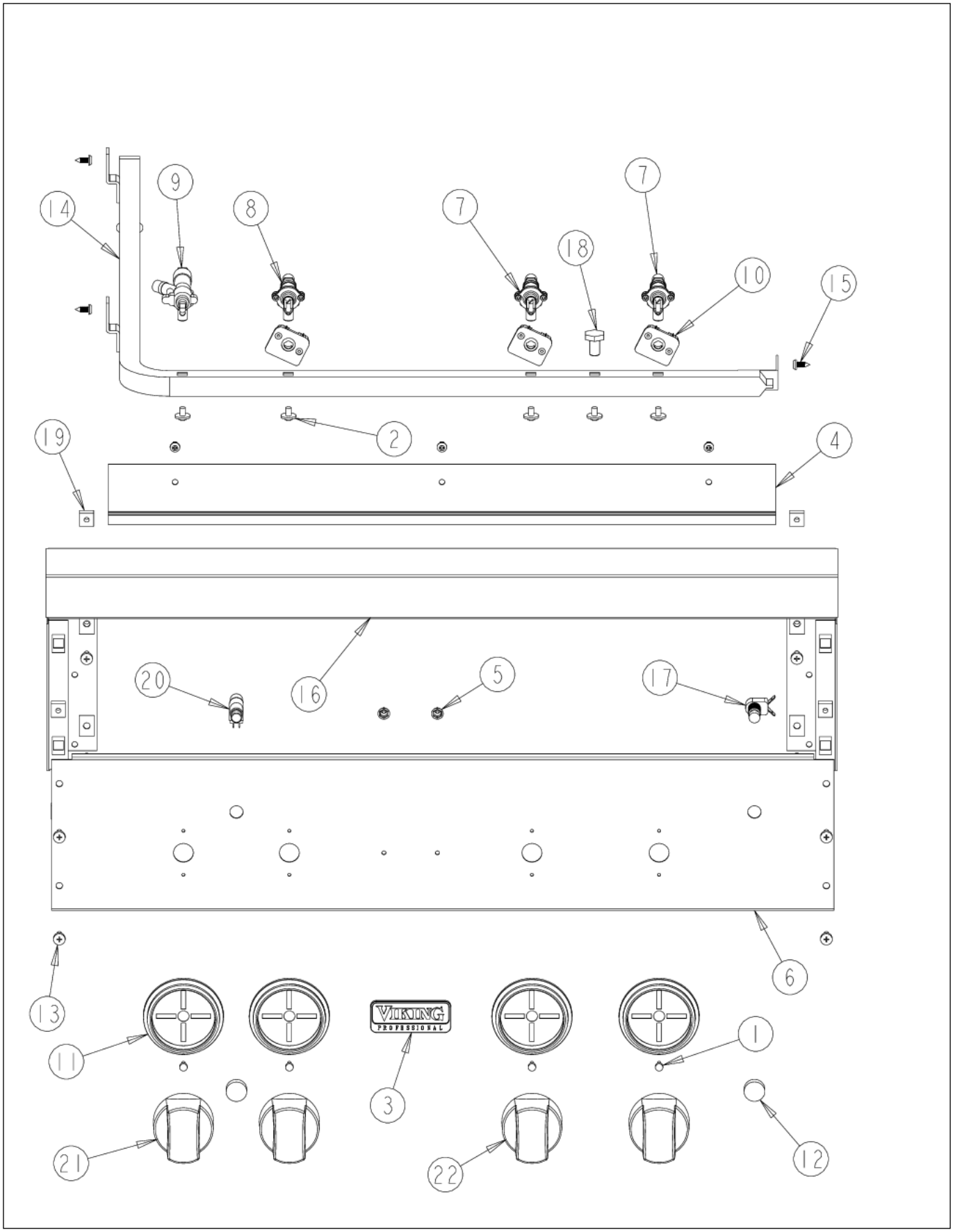

Item	Part No.	Name	Qty	Uom	NOTES
1	PD020067	' #6 X 3/8" PAN PHIL. TEK *SS*	1	EA	
2	PD010012	1/4 x 3/8 VALVE BOLT	1	EA	
3	PE010142	3" VIKING LOGO BLACK/CHROME	1	EA	
NI	PE010143	3" LOGO BK/BR	1	EA	
4	B20015555	30" GRILL GUTTER	1	EA	NO LONGER AVAILABLE, Not available online / Call for pricing and availability
5	PD030006	CAPPED WASHER PAL NUT	1	EA	
6	B92015544	CONTROL PANEL (VGBQ3002RE)	1	EA	
7	003533-000	GRILL VALVE NAT. (5,000-12,500 BTU)	1	EA	
NI	003573-000	GRILL VALVE L.P. (5,000-10,500 BTU)	1	EA	
8	003516-000	GRILL VALVE NAT. (7,600-25,000 BTU)	1	EA	
NI	003538-000	PA010150 VALVE AND BOLT KIT	1	EA	
9	046328-000	NATURAL ROTIS VALVE - KNOB KIT	1	EA	
NI	046329-000	LP ROTIS VALVE - KNOB KIT	1	EA	
10	PA020045	Spark Ignition Switch	1	EA	
11	050172-000	BEZEL, KNOB	1	EA	
NI	PB010209	Bezel - BR	1	EA	
12	PB010163	OVEN LIGHT SWITCH KNOB *BK* (VESO/D	1	EA	
13	PD020056	' #10-24 X 1/2" PH.TR. M.S. *SS*	1	EA	
14	PA050070	PHASE2 30" MANIFOLD	1	EA	
15	PD020055	' #10 X 1/2" PAN PHIL. TEK.*SS*	1	EA	
16	G3005223	LANDING LEDGE ASSY 30 (PHASE 2)	1	EA	
17	PE050019	OVEN LIGHT SWITCH (VGSO166) 90-DEG.	1	EA	
18	PA010012	ROPER PLUG	1	EA	
19	PD030050	10-24 CAGE NUT *SS*	1	EA	
20	PE050063	SPARKER SWITCH (PHASE 2)	1	EA	

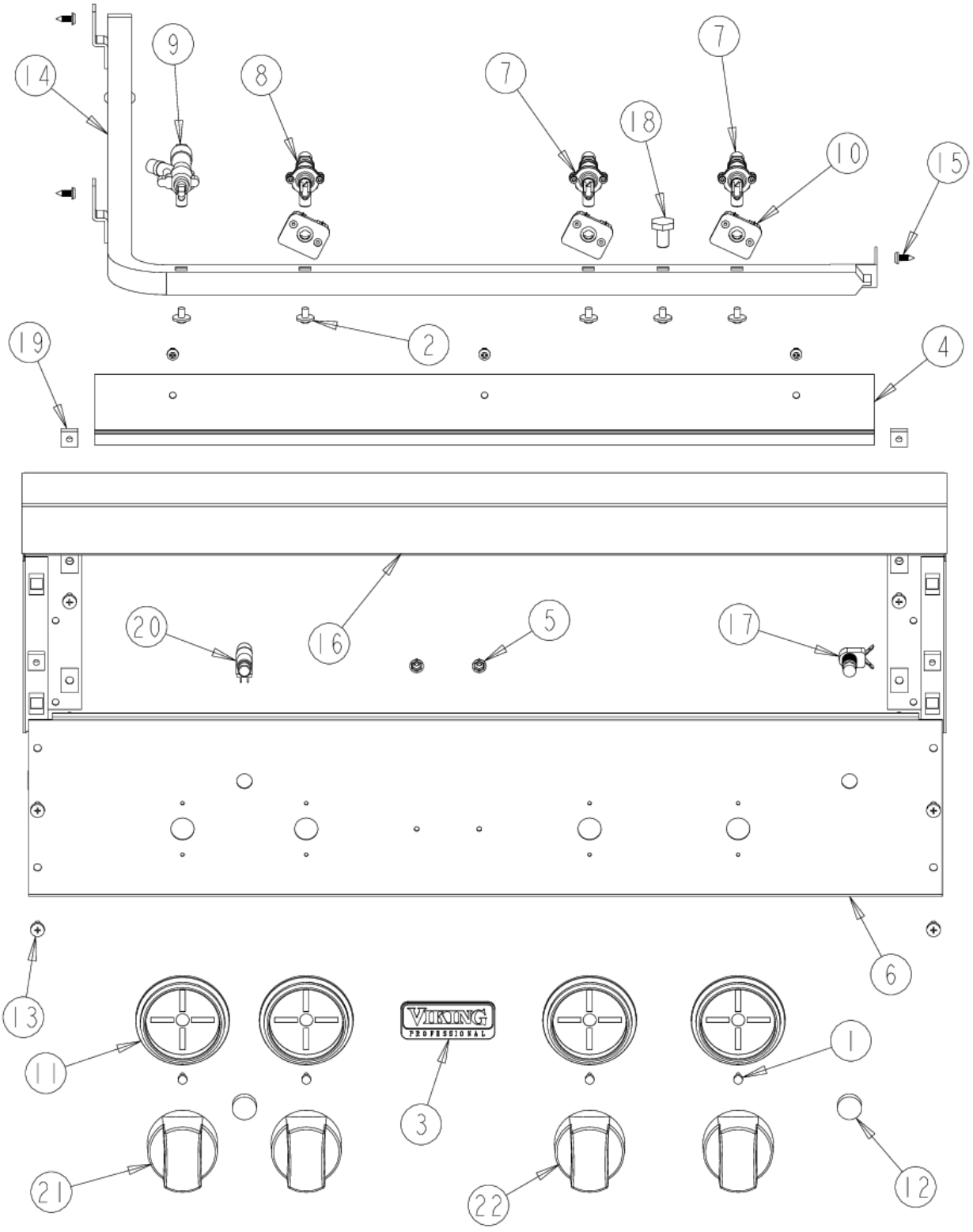
14
9
8
7
7
18
10
15
19
2
4
20
16
5
17
6
13
11
3
1
21
22
12

Item	Part No.	Name	Qty	Uom	NOTES
21	PA010088	ROTIS. BURNER KNOB	1	EA	
22	PA010126	OUTDOOR GRILL KNOB	1	EA	

DRIP TRAY

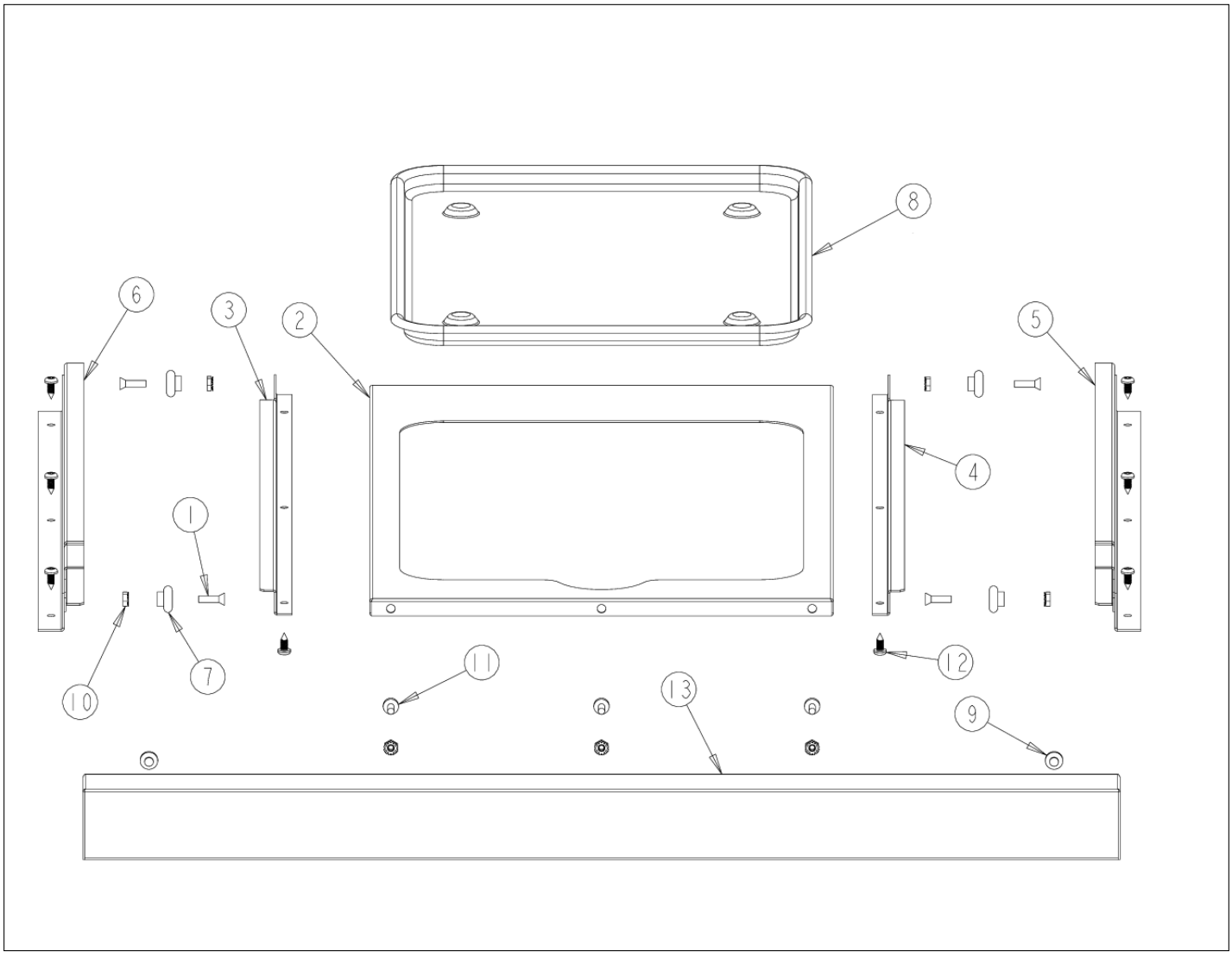

Item	Part No.	Name	Qty	Uom	NOTES
1	PD020082	10 X 24 COUNTERSUNK S.S. SCREW	1	EA	
2	B2005312	DRIP TRAY 30 (PHASE 2)	1	EA	
3	B2005317	DRIP TRAY RUNNER LH (PHASE 2)	1	EA	
4	B2005316	DRIP TRAY RUNNER RH	1	EA	
5	G3005215	DRIP TRAY SLIDE - RH	1	EA	
6	G3005214	DRIP TRAY SLIDE - LH	1	EA	
7	PC020025	DRIP TRAY WHEEL	1	EA	
8	J2101749	GREASE PAN	1	EA	
9	PD040004	GROMMET BUMPER	1	EA	
10	PD030044	10-24 KEPS NUT *SS*	1	EA	
11	PD020056	' #10-24 X 1/2" PH.TR. M.S. *SS*	1	EA	
12	PD020055	' #10 X 1/2" PAN PHIL. TEK.*SS*	1	EA	
13	PK010066	DRIP TRAY HANDLE (VGBQ30) T SERIES	1	EA	Not available online / Call for pricing and availability
NI	G3205308	30 INCH DRIP TRAY ASSY (PHASE 2)	1	EA	
Not Shown	NOTE	(DOES NOT INCLUDE ITEMS #5, 6, AND 8)		EA	

GRILL BURNER BOX AREA

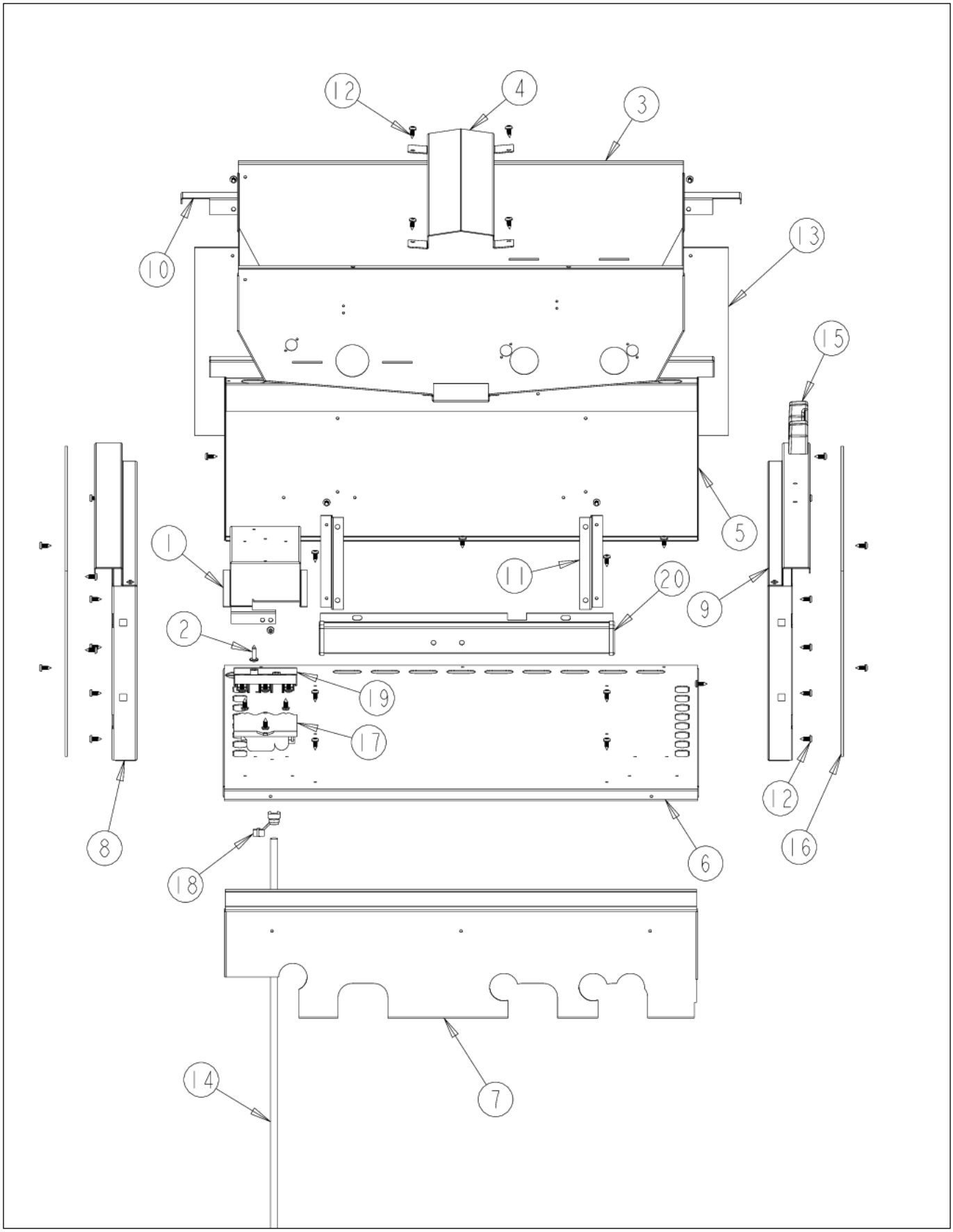

Item	Part No.	Name	Qty	Uom	NOTES
1	B30015552	0+4 SPARK MODULE TERMINAL HOUSING	1	EA	
2	PD020014	10X3/4 PH TR HD SMS	1	EA	
3	G3005232	BURNER BOX ASSY 53RH (PHASE 2)	1	EA	
4	B2005246	BURNER BOX SHIELD (PHASE 2)	1	EA	
5	B20015513	GRILL BOX BACK 30"	1	EA	
6	B20015510	GRILL BOX BOTTOM 30"	1	EA	
7	B2007820	GRILL FRONT	1	EA	
8	B2005204	Grill Box Side - LH	1	EA	
9	B2005203	Grill Box Side - RH	1	EA	
10	B20010115	GRILL BOX TRIM - 30	1	EA	NO LONGER AVAILABLE, Not available online / Call for pricing and availability
11	B2006305	HEAT SHIELD BRACKET	1	EA	
12	PD020055	' #10 X 1/2" PAN PHIL. TEK.*SS*	1	EA	
13	L1005399	REAR HEAT SHIELD 30""	1	EA	NO LONGER AVAILABLE
14	PE070791	GRILL POWER SUPPLY CORD (8 FT)	1	EA	
15	PB060055	Rotis. Mount Casting	1	EA	
16	L1005398	Side Heat Shield	1	EA	
17	PA020047	INVENSYS 0+4 RE-IGNITION SPARK MODULE	1	EA	
18	PD040044	SNAP THRU BUSHING 1/4"DIA CORD	1	EA	
19	PE070855	E SERIES TERMINAL BLOCK	1	EA	
20	A2000210	WIRE CHANNEL	1	EA	NO LONGER AVAILABLE, Not available online / Call for pricing and availability
NI	019962-000	SERVICE POWER CORD SHIELD KIT	1	EA	

LP REGULATOR ASSEMBLY

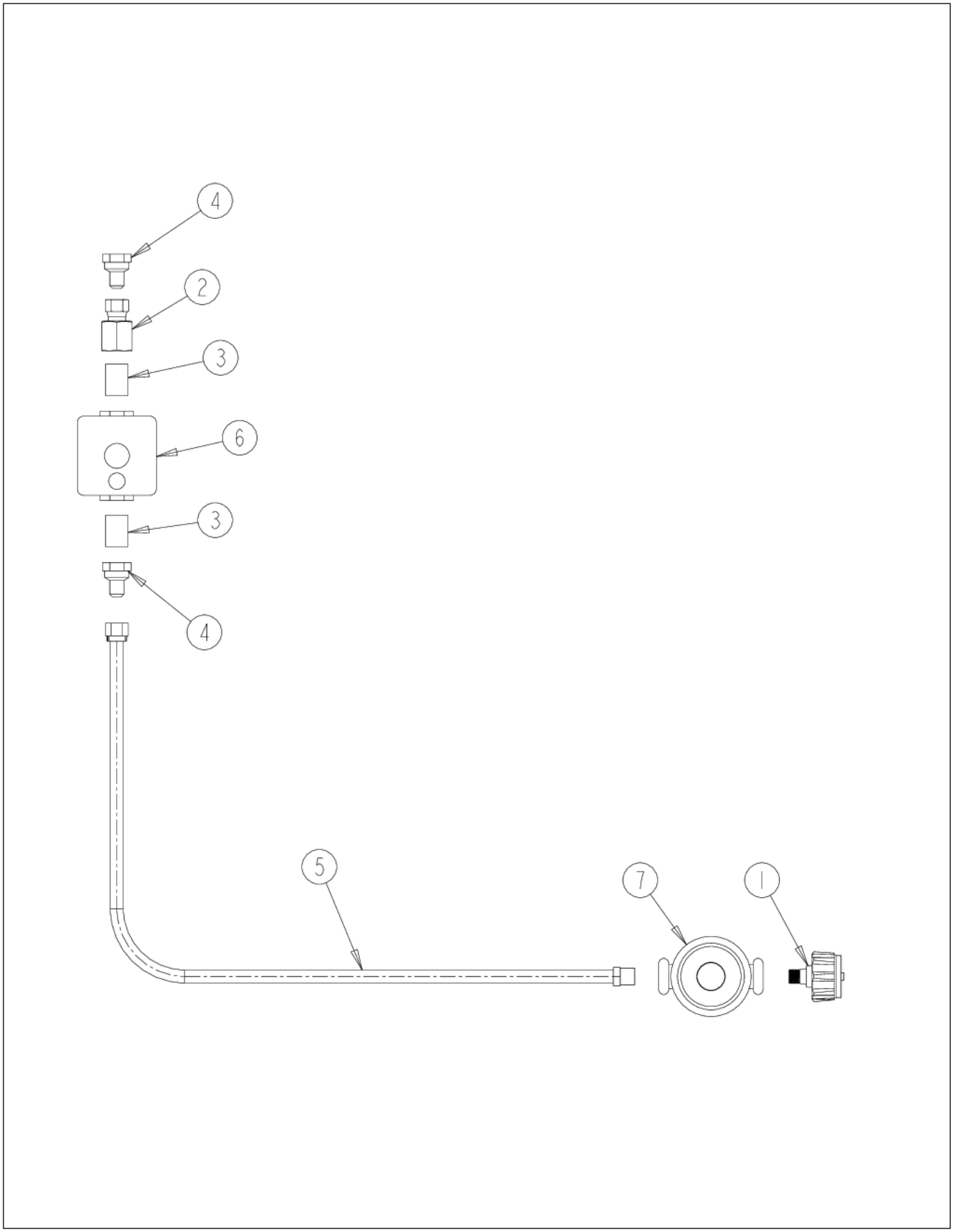

Item	Part No.	Name	Qty	Uom	NOTES
1	PA010138	CYLINDER CONNECTION	1	EA	
2	PB040235	1/2"NPT TO 3/8" FLARE COUPLING	1	EA	
3	PB040046	1/2" CLOSE NIPPLE	1	EA	
4	PB040146	1/2" X 3/8" FLARE ADAPTER (VGBQ)	1	EA	
5	PB020227	HIGH PRESSURE LP HOSE	1	EA	
6	PA070005	PRESSURE REG.(LP) RV47L-77-10.0	1	EA	
7	PA070007	LP TANK REGULATOR (VGBQ)	1	EA	
NI	G3004937	REGULATOR ASSY - L.P. W/HOSE	1	EA	

NATURAL GAS REGULATOR ASSEMBLY

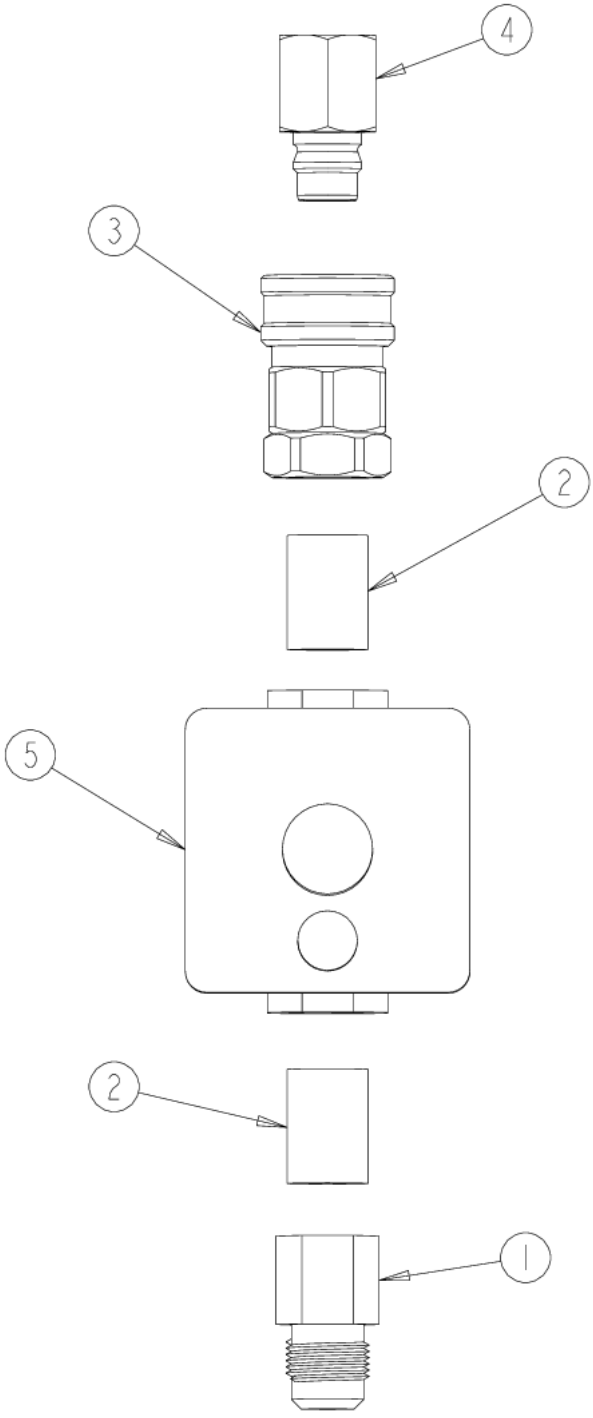

Item	Part No.	Name	Qty	Uom	NOTES
1	PB020239	7/8 FLARE TO 1/2 FEMALE CONNECTOR	1	EA	
2	PB040046	1/2" CLOSE NIPPLE	1	EA	
3	023653-000	Nipple-Coupler Assy	1	EA	
4	023653-000	Nipple-Coupler Assy	1	EA	
5	PA070006	PRESSURE REG.(NAT.)-4"-FOR BBQ GRIL - NLA	1	EA	
NI	G3004936	REGULATOR ASSY - NAT (P1 GRILL)	1	EA	

PE070816 WIRING HARNESS

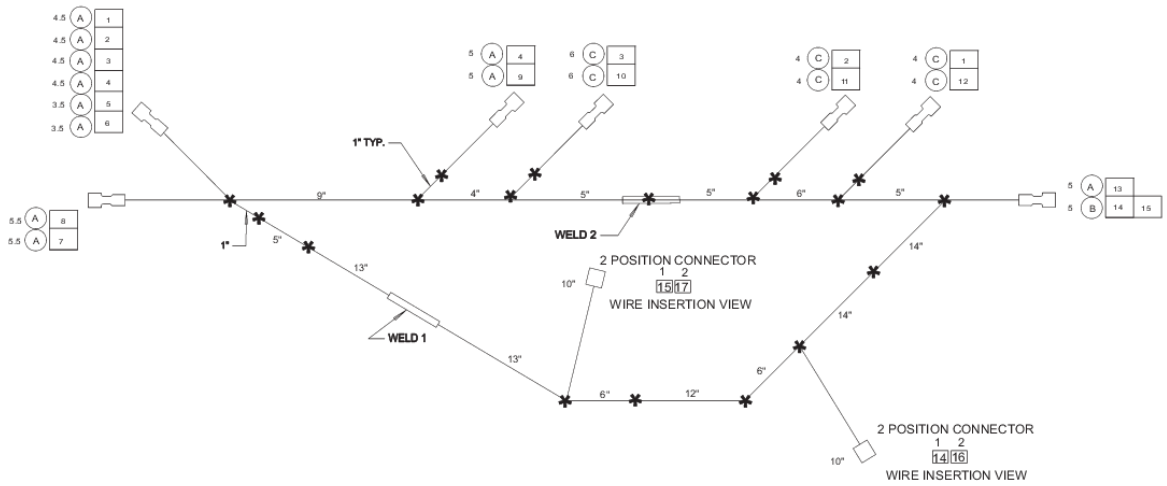

Item	Part No.	Name	Qty	Uom	NOTES
1	PE070816	WIRE HARNESS (VGBQ3002RE)	1	EA	

ROTISSERIE BURNER AREA

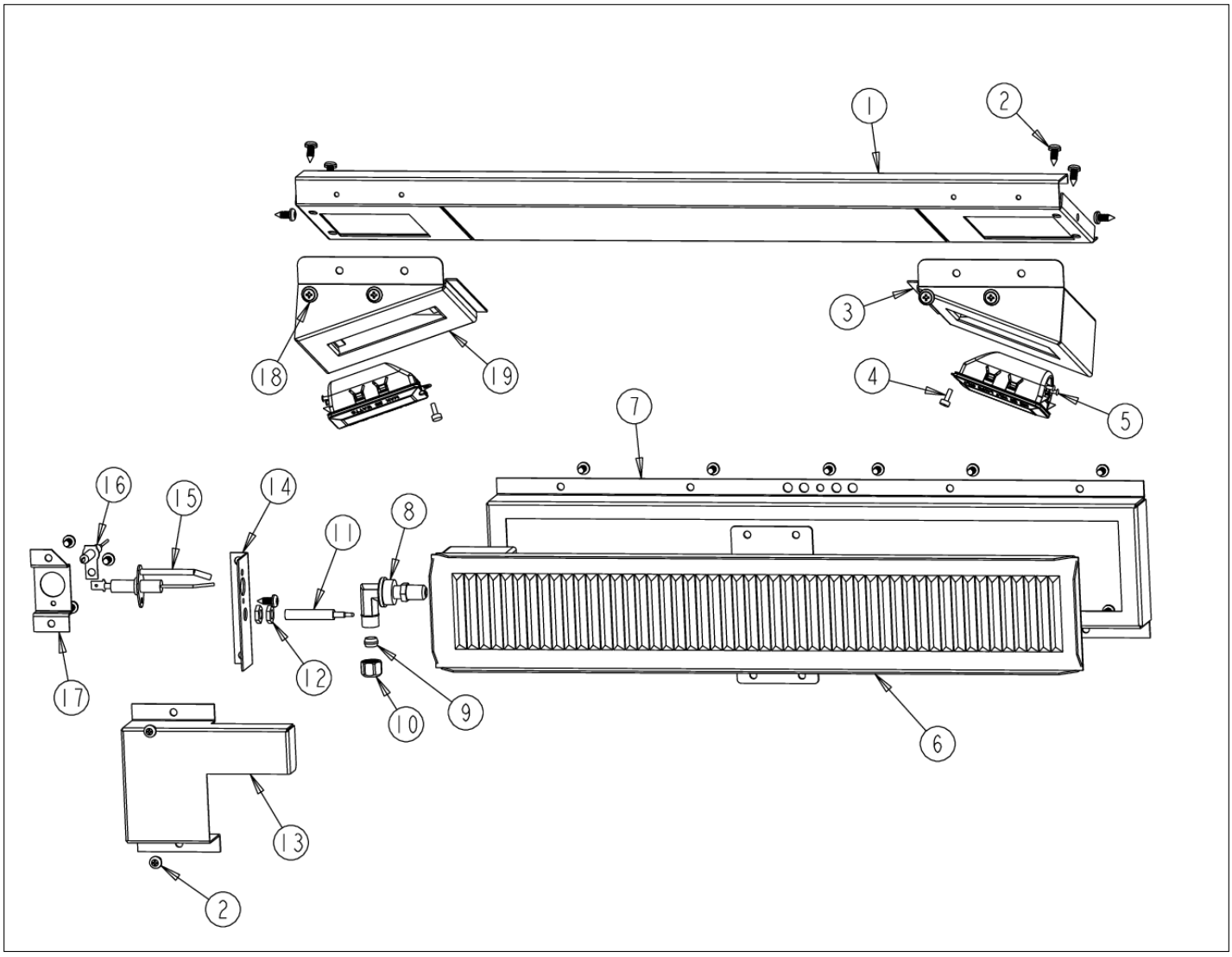

Item	Part No.	Name	Qty	Uom	NOTES
1	E91015559	30" FRONT HOUSING TOP	1	EA	NO LONGER AVAILABLE, Not available online / Call for pricing and availability
2	PD020055	' #10 X 1/2" PAN PHIL. TEK.*SS*	1	EA	
3	000603-000	GRILL LIGHT HOUSING RH	1	EA	
4	PD020067	' #6 X 3/8" PAN PHIL. TEK *SS*	1	EA	
5	005311-000	LAMP, OVEN, 120V/25W	1	EA	
Not Shown	NOTE	(INCLUDES 24" WIRE LEAD)		EA	
6	G3005289	I/R Burner Assy	1	EA	
7	B2005347	I/R Frame	1	EA	
8	PB040124	90 DEG. ORIFICE FITTING	1	EA	
NI	PB040125	ORIFICE FTG 90D 20"IR #57 HD YELLOW	1	EA	
9	PB040263	5/16 FERRULE	1	EA	
10	PB040228	FITTING BRASS COMPRESSION NUT	1	EA	
NI	PB020096	48" 5/16 S.S. FLEX TUBING REPL F2003505	1	EA	
11	PB010162	THERMOCOUPLE - BBQ GRILL W/ ROTIS	1	EA	
12	PD030048	THERMCOUPLE NUT M08-VGBQ-8743300007	1	EA	
13	B20015402	I/R IGNITOR COVER LH	1	EA	
14	B20015403	IR IGNITOR BRACKET	1	EA	
15	PB040160	WOK IGNITER	1	EA	
16	PB040280	FLEXIBLE ROTISSERIE IGNITOR	1	EA	
17	B20015401	FLEX IGNITER STAND OFF	1	EA	Not available online / Call for pricing and availability
18	PD020073	SRW #10 X 24 X 3/8 WAFER HD TYPE23	1	EA	
19	000602-000	GRILL LIGHT HOUSING LH	1	EA	

ROTISSERIE MOTOR

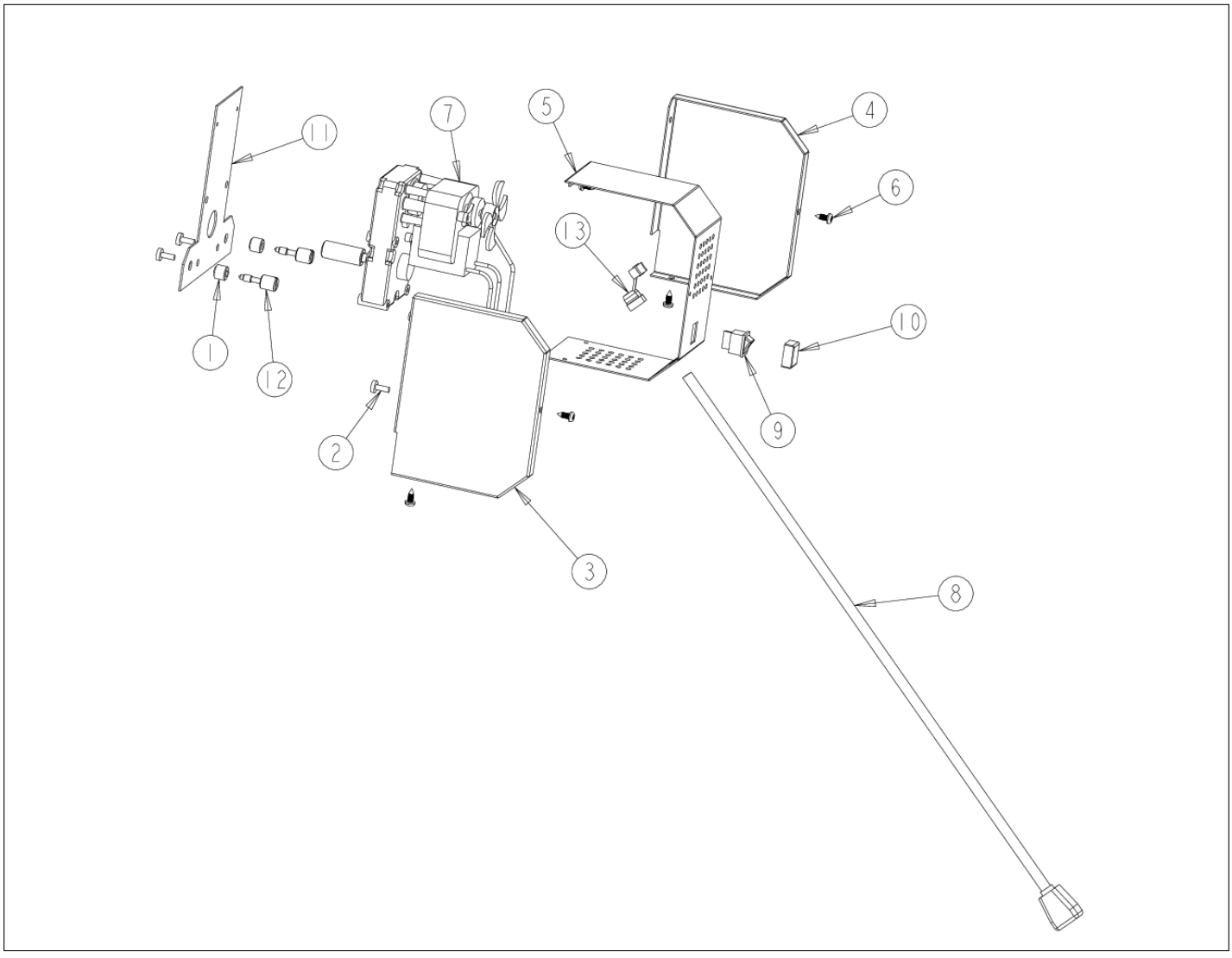

Item	Part No.	Name	Qty	Uom	NOTES
1	PD030064	CAPTURE NUT 1/4" #20		EA	
2	PD020056	' #10-24 X 1/2" PH.TR. M.S. *SS*		EA	
3	B2005284	PHASE II ROTIS BOX FRONT		EA	
4	B2005285	PHASE II ROTIS BOX FRONT		EA	
5	B2005286	PHASE II ROTIS COVER		EA	
6	PD020055	' #10 X 1/2" PAN PHIL. TEK.*SS*		EA	
7	PE070184	ROTISSERIE MOTOR		EA	
8	PE070189	ELECTRICAL SUPPLY CORD - BBQ GRILL		EA	
9	PE050051	ROTIS SWITCH		EA	
10	PE050046	ROTIS SWITCH BOOT		EA	NO LONGER AVAILABLE
Not Shown	NOTE	(MUST ORDER ITEM 9)		EA	
11	B1005283	ROTIS. MOUNTING PLATE (PHASE 2)		EA	
12	PD010090	ROTIS FASTENER KNOB		EA	
13	PD040044	SNAP THRU BUSHING 1/4"DIA CORD		EA	
NI	G3205282	ROTIS MOTOR ASSEMBLY (PHASE 2)		EA	

UPPER GRILL AREA

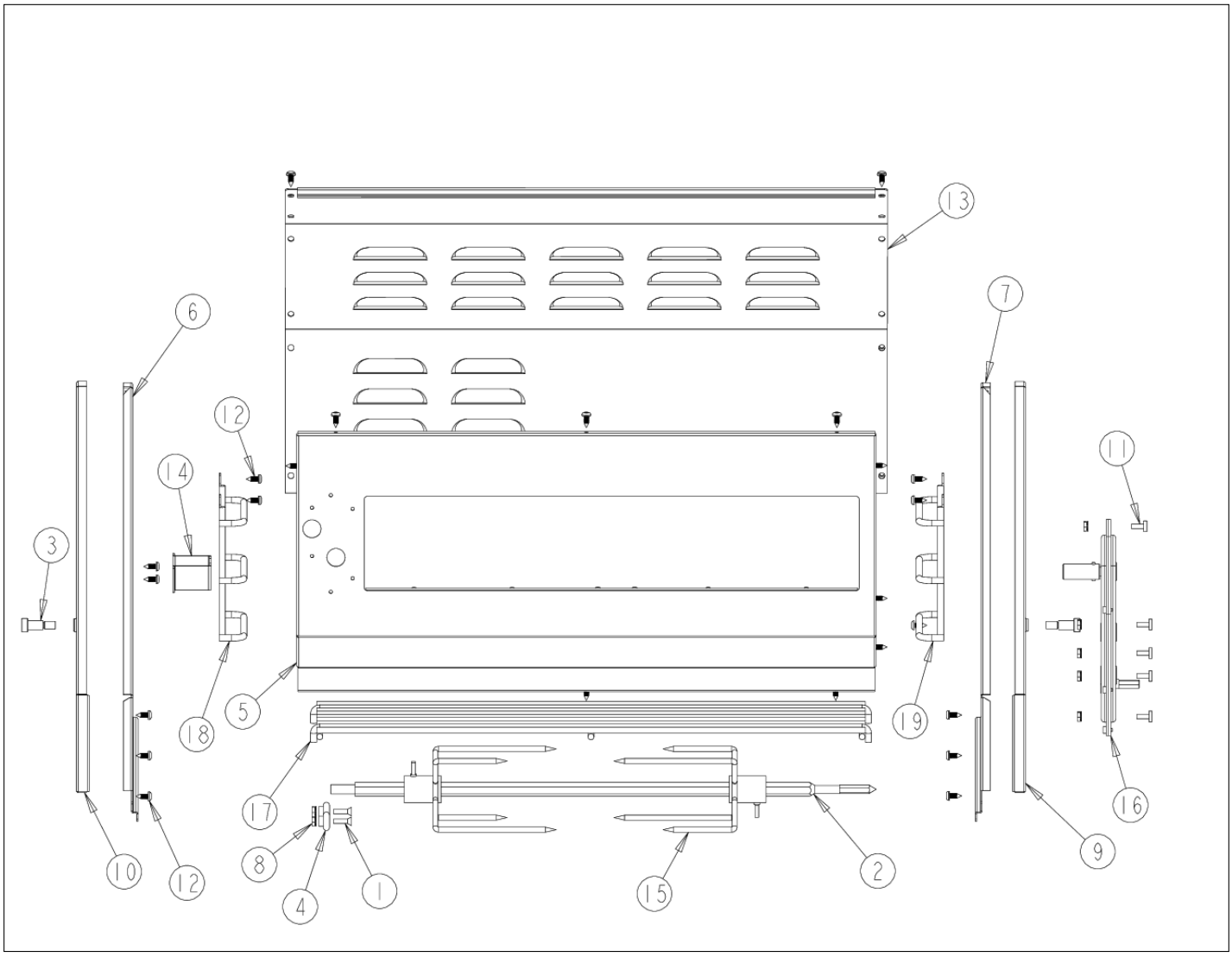

Item	Part No.	Name	Qty	Uom	NOTES
1	PD020082	10 X 24 COUNTERSUNK S.S. SCREW	1	EA	
2	PB060054	ROTIS SPIT ROD 30"	1	EA	
3	PD010043	5/16INCH SHOULDER BOLT (PHASE 2)	1	EA	
4	PC020025	DRIP TRAY WHEEL	1	EA	
5	G91015522	FRONT HOUSING ASSY (VGIQ3002RT)	1	EA	
6	B20015419	INSIDE WINDSHIELD LH	1	EA	Not available online / Call for pricing and availability
7	B20015418	INSIDE WINDSHIELD RH	1	EA	Not available online / Call for pricing and availability
8	PD030044	10-24 KEPS NUT *SS*	1	EA	
9	G5005256	O/S Windshield Assy - RH	1	EA	Not available online / Call for pricing and availability
10	G5005257	O/S Windshield Assy - LH	1	EA	
11	PD020056	' #10-24 X 1/2" PH.TR. M.S. *SS*	1	EA	
12	PD020055	' #10 X 1/2" PAN PHIL. TEK.*SS*	1	EA	
13	B2005281	REAR COVER - 30" (PHASE 2)	1	EA	
14	B2005278	ROTISSERIE ROLLER BRACKET (PHASE 2)	1	EA	
15	032881-000	FORK, RTSR	1	EA	
16	PC070024	ROTIS. GEAR BOX ASSY	1	EA	
17	PB060057	WARMING RACK 30	1	EA	
18	PB060113	WARMING RACK SUPPORT LH	1	EA	
19	PB060112	WARMING RACK SUPPORT RH	1	EA	

Appendix A:Pages Index

BURNER GRATE AREA 1
CANOPY ASSEMBLY 2
CONTROL AREA 3
DRIP TRAY 4
GRILL BURNER BOX AREA 5
LP REGULATOR ASSEMBLY 6
NATURAL GAS REGULATOR ASSEMBLY 7
PE070816 WIRING HARNESS 8
ROTISSERIE BURNER AREA 9
ROTISSERIE MOTOR 10
UPPER GRILL AREA 11

Appendix B:Parts Index

000268-000 2
000602-000 9
000603-000 9
003516-000 3
003533-000 3
003538-000 3
003573-000 3
005311-000 9
008090-000 1
008091-000 1
019962-000 5
023653-000 . . . . . 7, 7
027596-000 1
032881-000 11
046328-000 3
046329-000 3
050172-000 3
A2000210 5
B1005283 10
B20010115 5
B20015401 9
B20015402 9
B20015403 9
B20015418 11
B20015419 11
B20015510 5
B20015513 5
B20015516 1
B20015555 3
B2004921 1
B2005203 5
B2005204 5
B2005246 5
B2005248 1
B2005249 1
B2005278 11
B2005281 11
B2005284 10
B2005285 10
B2005286 10
B2005294 2
B2005295 2
B2005298 2
B2005301 2
B2005312 4
B2005316 4
B2005317 4
B2005324 1
B2005347 9
B2006305 5
B2007820 5
B30015552 5
B3005292 2
B3005293 2
B92015544 3
E91015559 9
G3004936 7
G3004937 6
G3005214 4
G3005215 4
G3005223 3
G3005232 5
G3005289 9
G3205282 10
G3205304SS 2
G3205304SSBR 2
G3205308 4
G5005256 11
G5005257 11
G91015522 11
J2101749 4
L1005398 5
L1005399 5
PA010012 3
PA010088 3
PA010126 3
PA010138 6
PA020045 3
PA020047 5
PA050070 3
PA060052 1

PA060053 1
PA060068 1
PA060069 1
PA070005 6
PA070006 7
PA070007 6
PA080050 1
PA080051 1
PB010162 9
PB010163 3
PB010192 2
PB010209 3
PB010212 2
PB010337 2
PB020096 9
PB020114 1
PB020115 1
PB020227 6
PB020239 7
PB040046 . . . . . 6, 7
PB040124 9
PB040125 9
PB040146 6
PB040160 9
PB040228 9
PB040235 6
PB040263 9
PB040280 9
PB060054 11
PB060055 5
PB060057 11
PB060112 11
PB060113 11
PC020025 . . . . . 4, 11
PC070024 11
PD010012 3
PD010043 11
PD010090 10
PD020014 5
PD020048 1
PD020055 . . . . . 1, 2, 3, 4, 5, 9, 10, 11
PD020056 . . . . . 3, 4, 10, 11
PD020067 . . . . . 1, 3, 9
PD020069 2
PD020073 9
PD020082 . . . . . 4, 11
PD030006 3
PD030044 . . . . . 4, 11
PD030048 9
PD030050 3
PD030060 1
PD030064 10
PD040004 4
PD040010 2
PD040044 . . . . . 5, 10
PD040166 2
PE010142 3
PE010143 3
PE030001PVD 2
PE030041 2
PE030045PVD 2
PE050019 3
PE050046 10
PE050051 10
PE050063 3
PE070184 10
PE070189 10
PE070791 5
PE070816 8
PE070855 5
PK010061 1
PK010066 4