FWCI1240GR

DOOR & HINGE ASSY 1
INTERIOR COMPONENTS 2
REAR COMPONENTS 3
SHELF ASSEMBLY 4
WIRING DIAGRAM 5
Appendix A:Pages Index . . . . . A
Appendix B:Parts Index . . . . . B

DOOR & HINGE ASSY

NON
ILLUSTRATED PART

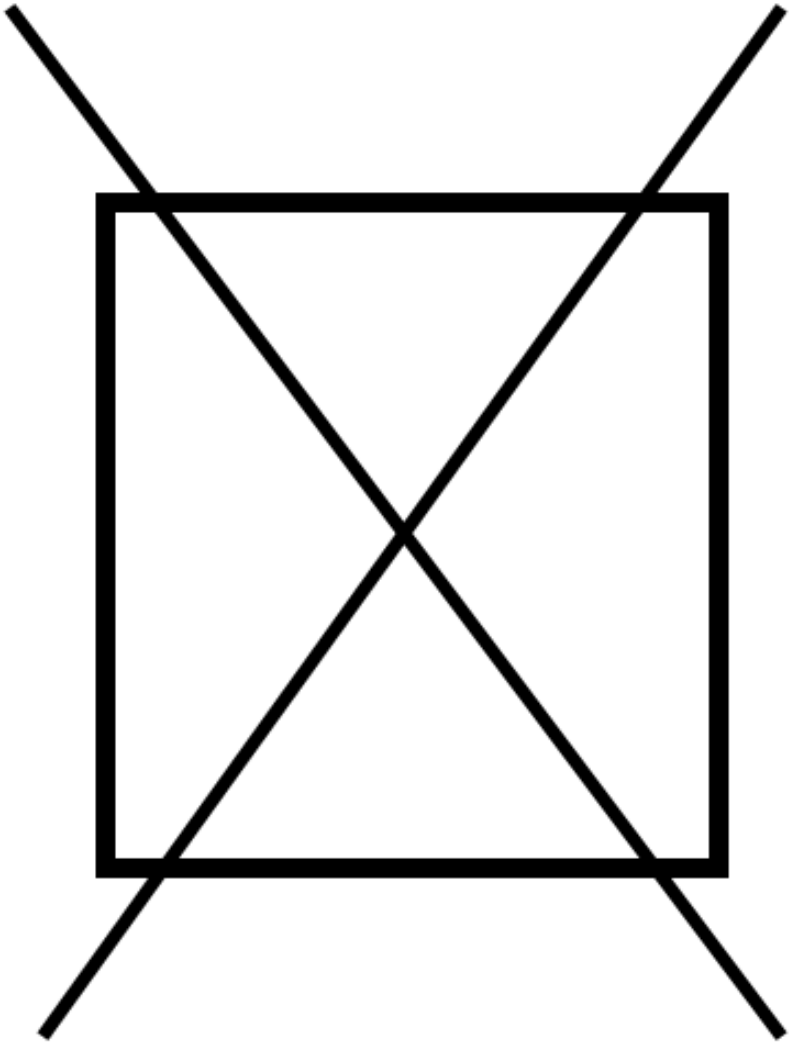

Item	Part No.	Name	Qty	Uom	NOTES
1	033105-000	RD-VK-24-R4, CLEAR GLASS W/WOOD BORDER DOOR PANEL ASSY	1	EA	
2	033021-000	HINGE KIT, RH	1	EA	
3	032972-000	DOOR GASKET, 24"	1	EA	
4	033015-000	PLUNGER FASTENER	2	EA	
5	032973-000	PLUNGER BRACKET	1	EA	

INTERIOR COMPONENTS

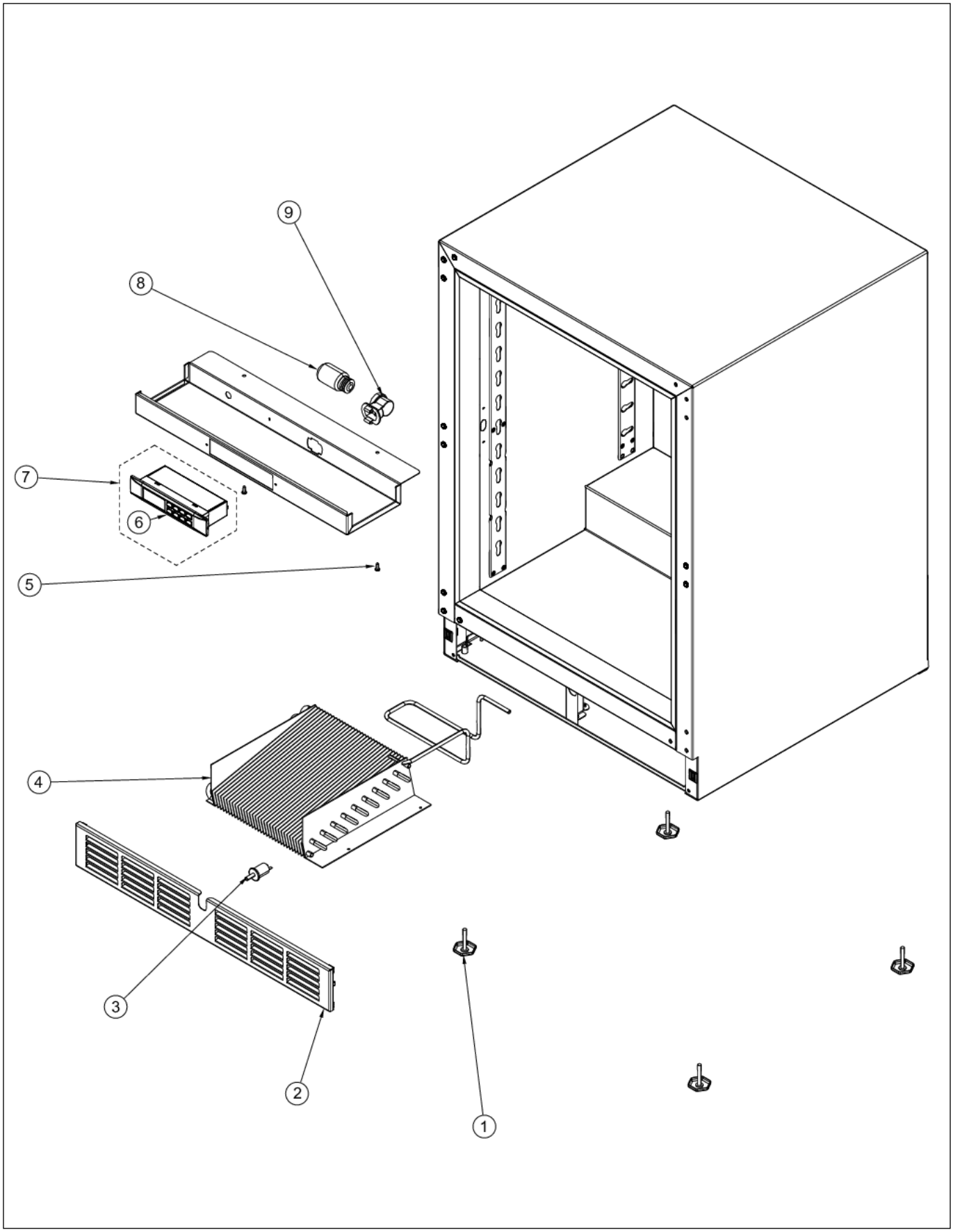

Item	Part No.	Name	Qty	Uom	NOTES
1	033033-000	LEVELLING LEG	4	EA	
2	033032-000	GRILLE ASSEMBLY, 24"	1	EA	
3	033040-000	DOOR SWITCH	1	EA	
4	033041-000	CONDENSER	1	EA	
5	033024-000	FASTENER, CONTROL MOUNTING	2	EA	
6	033023-000	CONTROLLER FACE PLATE	1	EA	
7	033022-000	CONTROLLER ASSY	1	EA	
8	033026-000	LIGHT BULB	1	EA	
9	033027-000	LIGHT SOCKET	1	EA	
NI	033028-000	HARNESS, CONTROLLER	1	EA	
NI	033039-000	HARNESS, MACHINE COMPARTMENT	1	EA	
NI	033025-000	SENSOR	1	EA	

REAR COMPONENTS

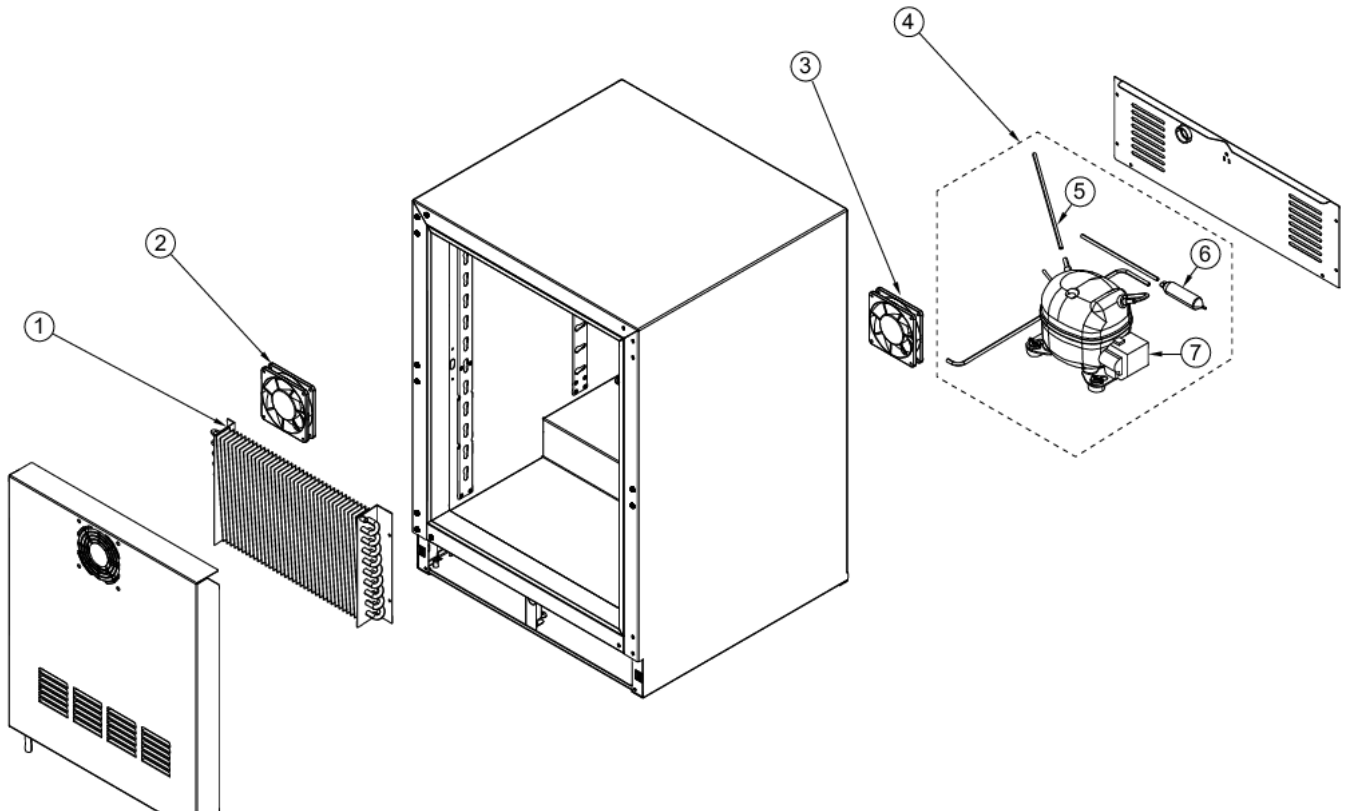

Item	Part No.	Name	Qty	Uom	NOTES
1	033029-000	EVAP ASSEMBLY	1	EA	
2	033038-000	EVAPORATOR / CONDENSER FAN MOTOR	1	EA	
3	033038-000	EVAPORATOR / CONDENSER FAN MOTOR	1	EA	
4	033034-000	COMPRESSOR KIT	1	EA	
5	033037-000	PROCESS TUBE	2	EA	
6	033035-000	DRIER	1	EA	
7	033036-000	COMP. START COMPONENTS	1	EA	
NI	033031-000	HARNESS, FAN MOTOR	1	EA	
NI	033042-000	POWER CORD	1	EA	

SHELF ASSEMBLY

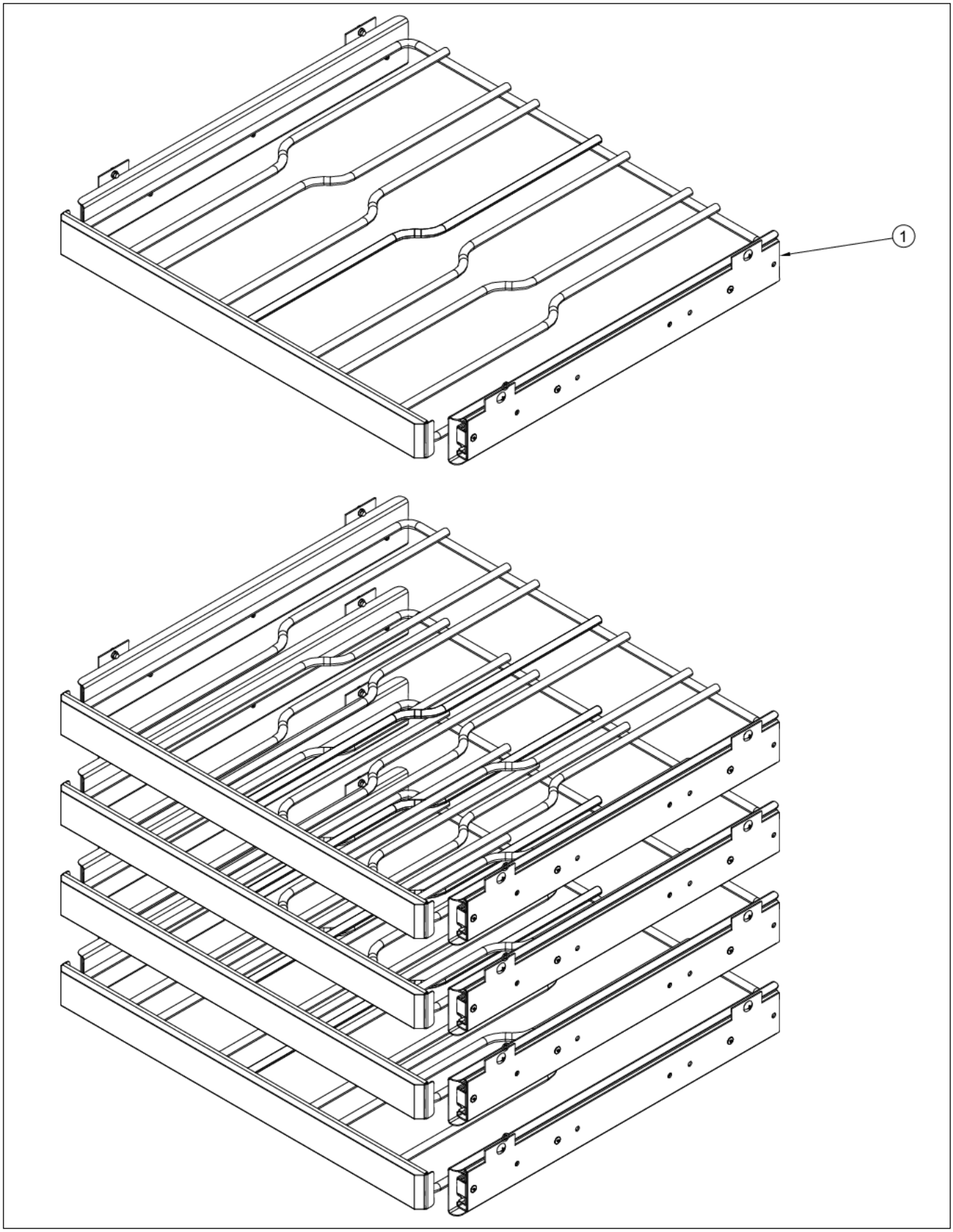

Item	Part No.	Name	Qty	Uom	NOTES
1	033018-000	SCREW, HANDLE MOUNTING	5	EA	

WIRING DIAGRAM

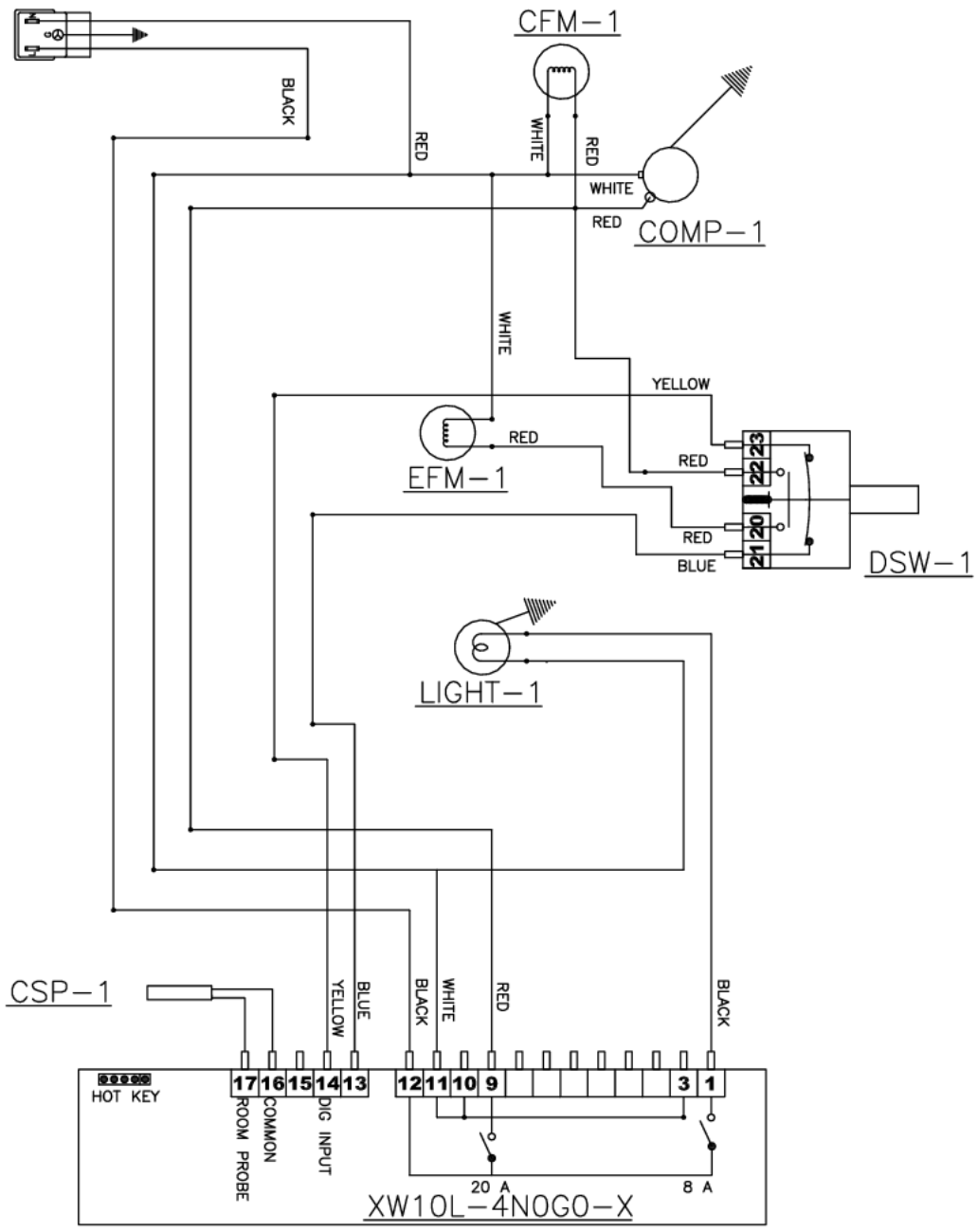

XW10L--REFRIGERATION SYSTEM CONTROLLER
DSW–1--LIGHT AND EVAP FAN MOTOR DOOR SWITCH
LIGHT 1--COMPARTMENT LIGHT
EFM 1--EVAPORATOR FAN MOTOR
CSP–1--REFRIGERATED COMPARTMENT 1 SENSOR PROBE
CFM–1--CONDENSER FAN MOTOR

Appendix A:Pages Index

DOOR & HINGE ASSY 1
INTERIOR COMPONENTS 2
REAR COMPONENTS 3
SHELF ASSEMBLY 4
WIRING DIAGRAM 5

Appendix B:Parts Index

032972-000 1
032973-000 1
033015-000 1
033018-000 4
033021-000 1
033022-000 2
033023-000 2
033024-000 2
033025-000 2
033026-000 2
033027-000 2
033028-000 2
033029-000 3
033031-000 3
033032-000 2
033033-000 2
033034-000 3
033035-000 3
033036-000 3
033037-000 3
033038-000 . . . . . 3, 3
033039-000 2
033040-000 2
033041-000 2
033042-000 3
033105-000 1