ER30D, ER30DSR Ranges

Page #	Description
2	Grates, Trim and Top Frame
3	Cooktop Assembly Drawing
4	Cooktop Parts
5	Control Panel Assembly Drawing
6	Cooktop Manifold
7	Oven Cell Assembly Drawing
8	Oven Cell Parts
9	Oven Case
10	Oven Door
11	Range Base
12	Miscellaneous Parts

IMPORTANT: This model is not approved for field conversions from

one gas type to another and from one altitude setting to another.

Revised 07-08-2014

ER30D Grates, Trim and Top Frame

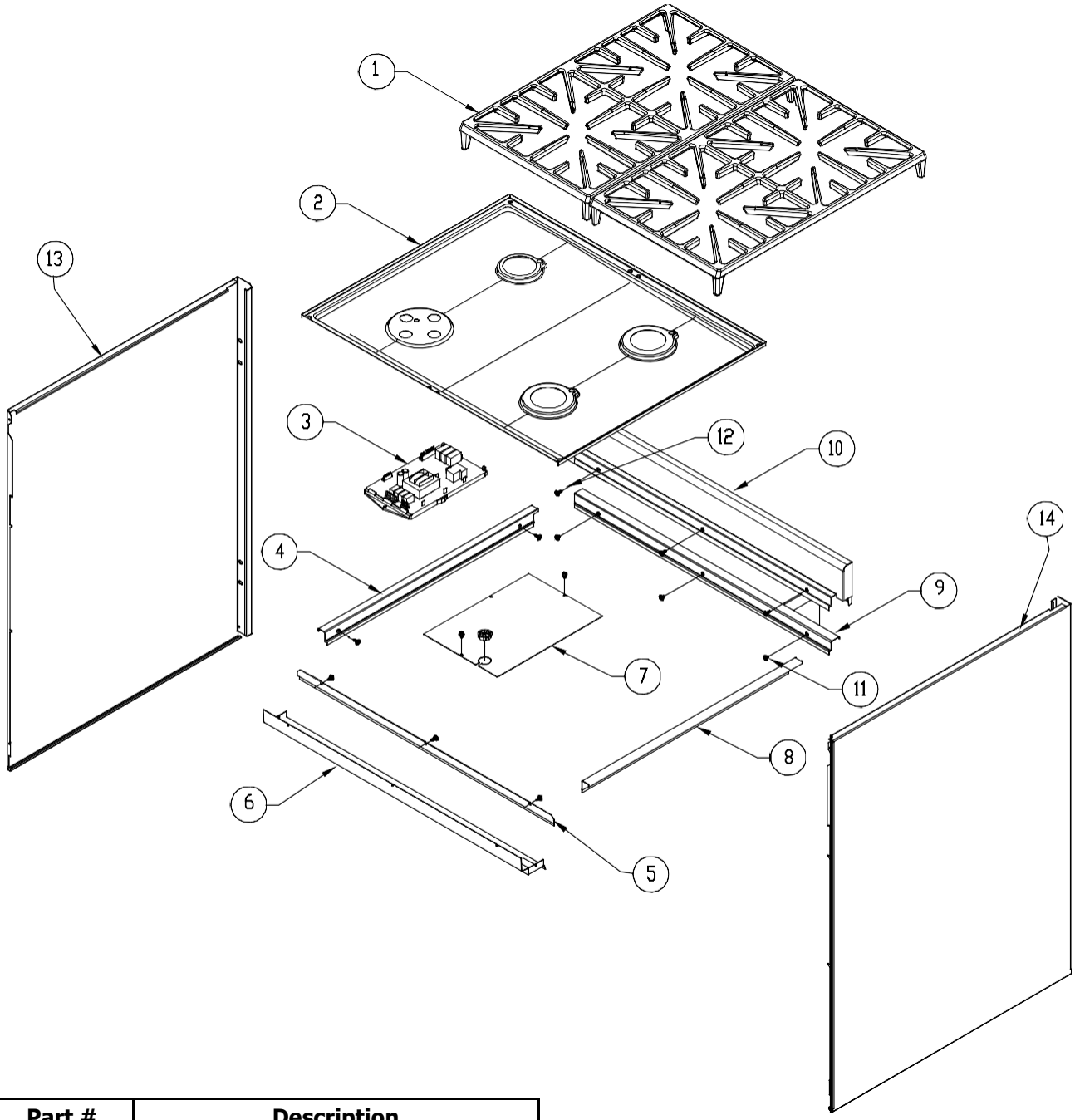

Item	Part #	Description
1	101524	Grate
2	101517BP	Spill Tray
3	100612	Power Board
4	101915-01	Trim, Side Top, Left, ER30D
4	101915-03	Trim, Side Top, Left, ER30DSR
5	100973	Front Trim, Spill Tray
6	100975	Support, Spill Tray, Front
7	100623	Relay Board Cover
8	101915-02	Trim, Side Top, Right, ER30D, ER30D
	101915-04	Trim, Side Top, Right, ER30DSR

Item	Part #	Description
9	102151-01	Trim, Rear, ER30DSR
10	700566-02	Assy, Backsplash
11	102373	Screw, #8-18 x 1/4”
12	83708	Screw, #8 x 1/2”
13	100677-01	Side Panel, Left
14	100677-02	Side Panel, Right

ER30D Cooktop Assembly Drawing

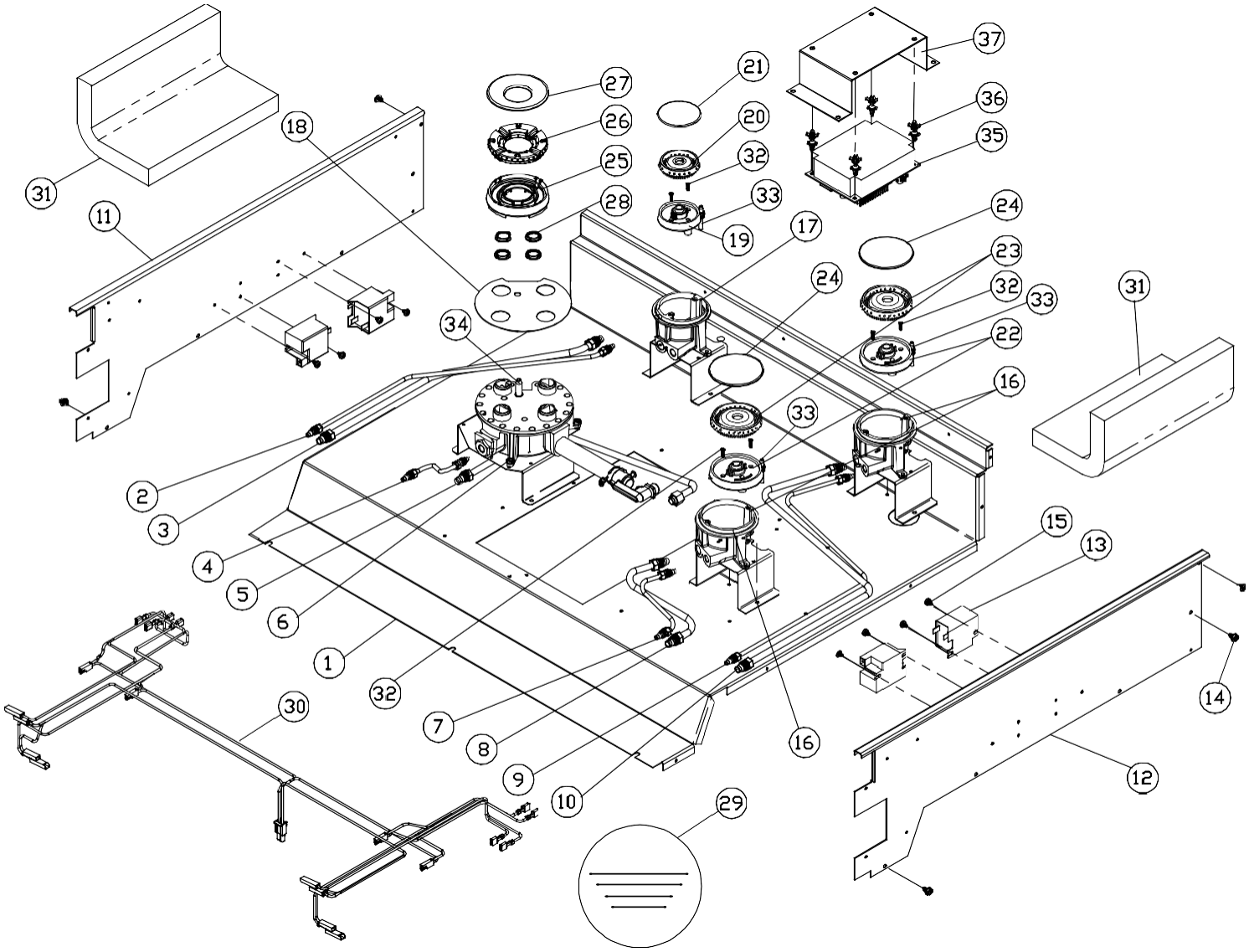

ER30D Cooktop Parts

Item	Part # (NG)	Part # (LP)	Part # (NGH)	Part # (LPH)	Description
1	100684[1]	100684[1]	100684[1]	100684[1]	Frame Chassis[1]
2	100580-17	100580-17	100580-17	100580-17	3/16" Left Rear Flex Tube
3	100579-11	100579-11	100579-11	100579-11	5/16" Rear Left Flex Tube
4	100929-03	100929-03	100929-03	100929-03	3/16" Left Front Flex Tube
5	100578-09	100578-09	100578-09	100578-09	5/16" Front Left Flex Tube
6	700066	700345	700498-01	700498-02	Asy, Dual Burner, 18K
7	100929-04	100929-04	100929-04	100929-04	3/16" Right Front Flex Tube
8	100927-03	100927-03	100927-03	100927-03	5/16" Front Right Flex Tube
9	100580-18	100580-18	100580-18	100580-18	3/16" Right Rear Flex Tube
10	100579-12	100579-12	100579-12	100579-12	5/16" Right Rear Flex Tube
11	102311-01	102311-01	102311-01	102311-01	Side Support, Upper Left
12	102311-02	102311-02	102311-02	102311-02	Side Support Panel, Right
13	72634	72634	72634	72634	Spark Module
14	83571	83571	83571	83571	Screw, Phillips Head, #8 x 3/8"
15	83001	83001	83001	83001	Screw, Phil Pan Head, #8 x 1/4"
16	700068	700348	700500-01	700500-02	Asy, Injector Holder, 16K
17	700067	700346	700499-01	700499-02	Asy, Injector Holder, 8.5K
18	700145	700145	700145	700145	Graphite Gasket, Dual Burner
19	100696	100696	100696	100696	Burner Base, 8.5K
20	100699[4]	100699[4]	100699[4]	100699[4]	Burner Ring, 8.5K[4]
21	100699[4]	100699[4]	100699[4]	100699[4]	Burner Cap, 8.5K[4]
22	100702	100702	100702	100702	Burner Base, 16K
23	700493[5]	700493[5]	700493[5]	700493[5]	Burner Ring, 16K[5]
24	700493[5]	700493[5]	700493[5]	700493[5]	Enamelled Cap, 16K[5]
25	700029	700029	700029	700029	Dual Burner Base, 18K
26	100703[6]	100703[6]	100703[6]	100703[6]	Dual Burner Ring, 18K[6]
27	100703[6]	100703[6]	100703[6]	100703[6]	Cap, Enamelled STL Dual 18K[6]
28	700017	700017	700017	700017	Thread Rings, Dual Burner
29	100593	100593	100593	100593	Igniter Wire Set
30	100599[2]	100599[2]	100599[2]	100599[2]	Wire Harness[2]
31	100910	100910	100910	100910	Insulation, Single Point Igniter
32	83023	83023	83023	83023	Screw, Slot HWH, #10 x 3/8"
33	106087	106087	106087	106087	Igniter Kit, 8.5k/16k Burners
34	106088	106088	106088	106088	Igniter Kit, 18k Burners
35	106104[3]	106104[3]	106104[3]	106104[3]	Board, LED Isolato[3]
36	83538[3]	83538[3]	83538[3]	83538[3]	Nylon, PCB Support[3]
37	103798[3]	103798[3]	103798[3]	103798[3]	LED Isolator Bracket[3]
-	106180[3]	106180[3]	106180[3]	106180[3]	Wire Harness, 5 VCD (Not Shown)[3]

[1]Use PN 100684 for Rev. A models. Use PN 106221 for Rev. B and above models.

[2]Use PN 100599 for Rev. A models. Use PN 106006 for Rev. B and above models.

[3]Not used on Rev A models

[4]Order Kit # 100699 (1 burner ring and cap)

[5]Order Kit # 700493 (1 burner ring and cap)

[6]Order Kit # 100703 (1 burner ring, cap and base)

The Life of the Kitchen.

Dacor Technical Service • 14425 Clark Avenue Industry, CA 91745 • Phone 800-353-2267 • FAX 909-348-5601

ER30D Control Panel Assembly Drawing

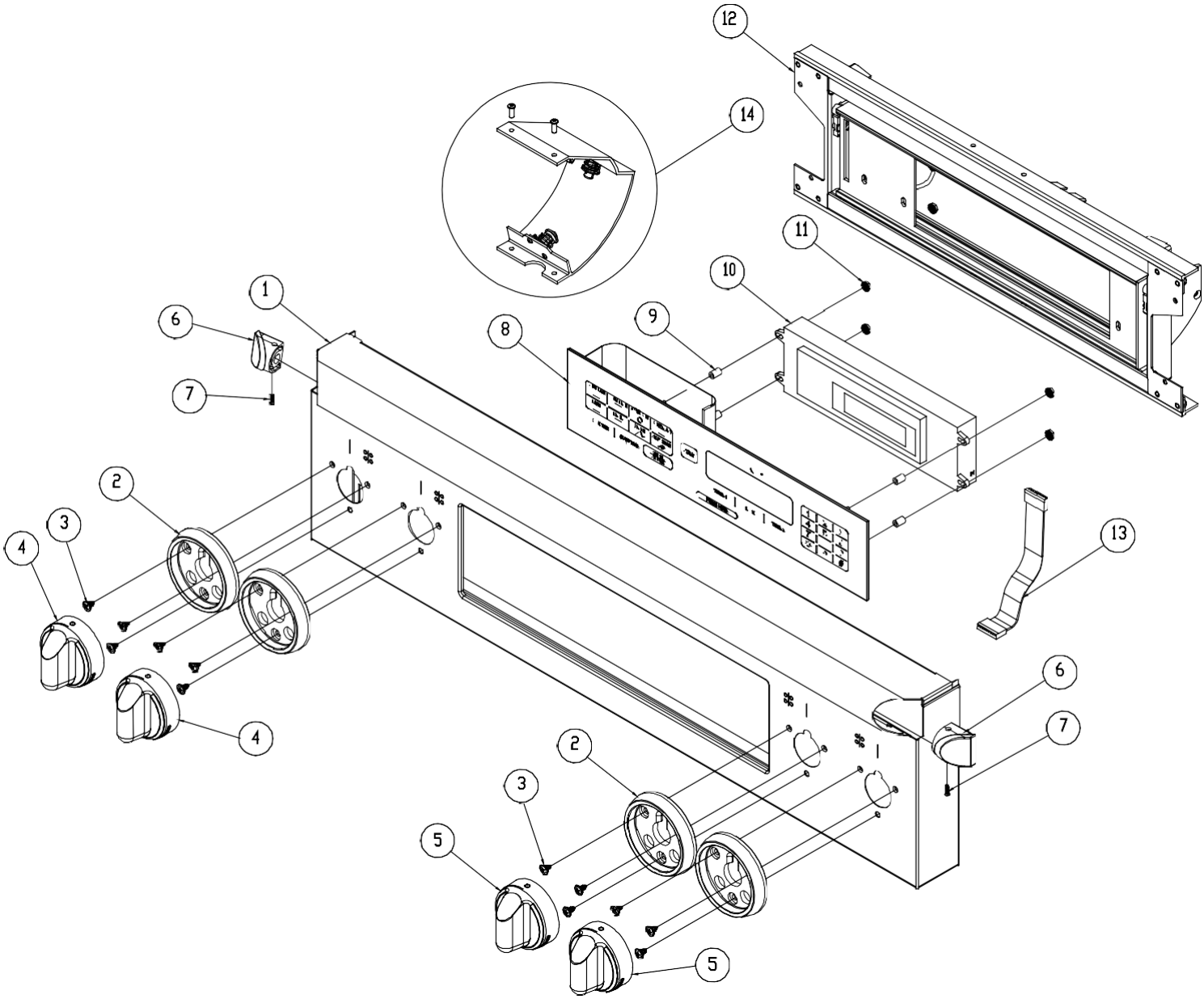

Item	Part #	Description
1	100406E	Control Panel AFTER Serial #F-A-08040129
	700792	Control Panel BEFORE Serial #F-A-08040129
2	100122	Trim Ring (Specify color)
3	83263	Screw, Phil Round Washer HD
4	100127-01	Knob, Simmer, Black
	105374-01	Knob, Simmer, METALLIC
5	100127-02	Knob, Griddle, Black
	105374-02	Knob, Griddle, METALLIC
6	100128CH	End Cap, Chrome

Item	Part #	Description
7	101505	Screw, 4-40 x 1/2
8	105310	Membrane
9	701098[1]	Spacer[1]
10	701082[2]	Controller Kit[2]
11	701098[1]	Nut, Keps, #6-32[1]
12	700513-01	Flip-Up Controller Assembly
13	100596	Harness
14	700200	Asy, Frame Center Extension
[1] Order Kit PN 701098, includes 4 spacers and 4 Keps nuts.		
[2]Includes 1 controller, 4 spacers and 4 Keps nuts.		

ER30D Cooktop Manifold

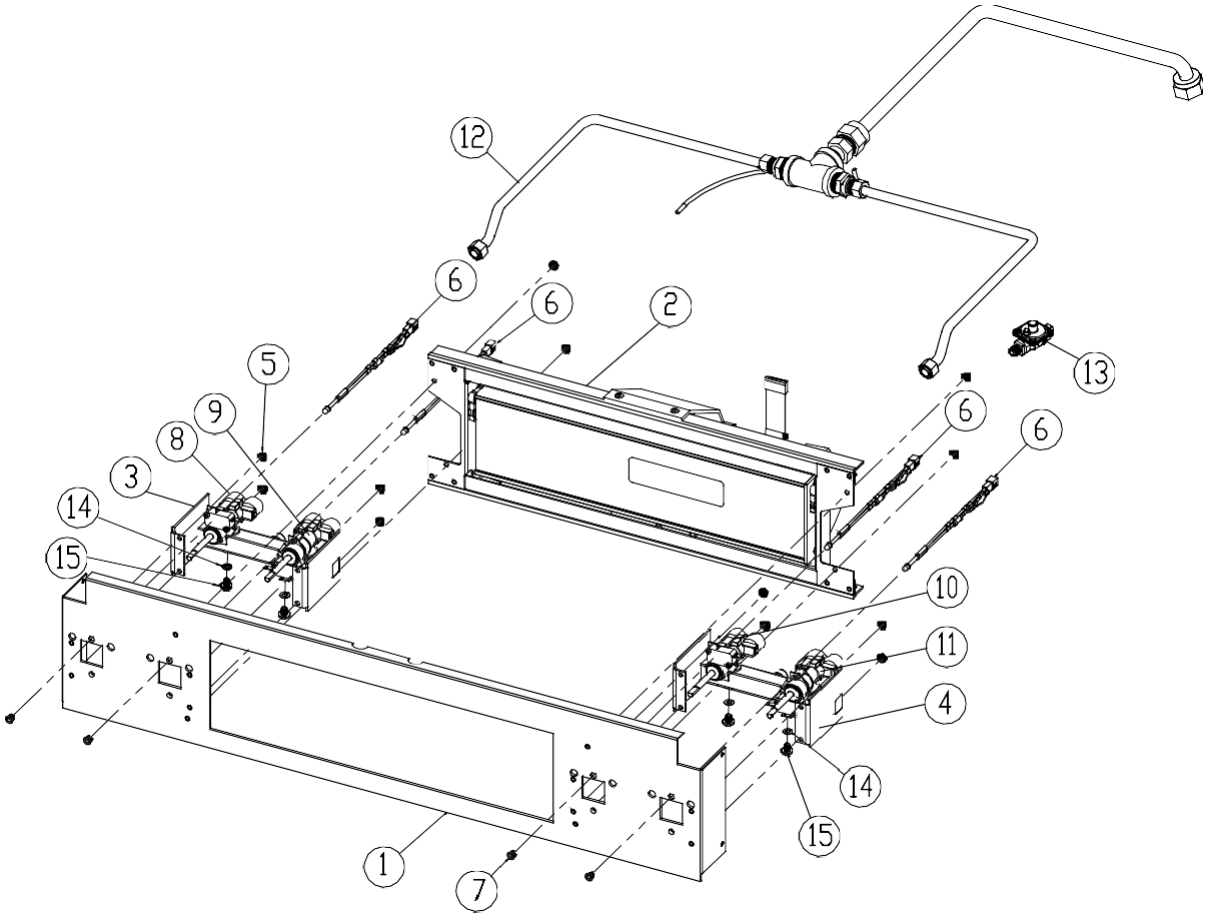

Item	Part # (NG)	Part # (LP)	Description
1	700333	700333	Assy, Sub-Panel w/Hardware
2	700513-01	700513-01	Assy, Flip-Up Controller
3	N/A	N/A	Assy, Manifold, w/Valves, Left
4	N/A	N/A	Assy, Manifold, w/Valves, Right
5	83308	83308	Keps Nut
6	701616/701617[1]	701616/701617[1]	LED Kit[1]
7	103757[2]	103757[2]	Holder, LED Light[2]
8	101561-01	101561-06	Valve, 8.5k
9	101561-03	101561-08	Valve, 18k
10	101561-05	101561-10	Valve, 16k
11	101561-02	101561-07	Valve, 16k
12	100717	100717	Assy, Tubing Inlet
13	100653	100965	Regulator
14	101564	101564	Washer, Valve MTG, Screw
15	101563	101563	Screw, Valve MTG.
-	103789	103789	Switch, Spark (not shown)
-	101562	101562	Washer, Valve MTG, Silicon (not shown)
[2]Use kit P/N 701616 for units before serial number F-C-10340010. Use kit P/N 701617 for units after serial number F-C-10340010 (includes isolator board). All versions include 4 LED assembles. Replace all 4 so that they match in brightness.			
[2]Use PN 72920 for Rev. A models.			

ER30D Oven Cell Assembly

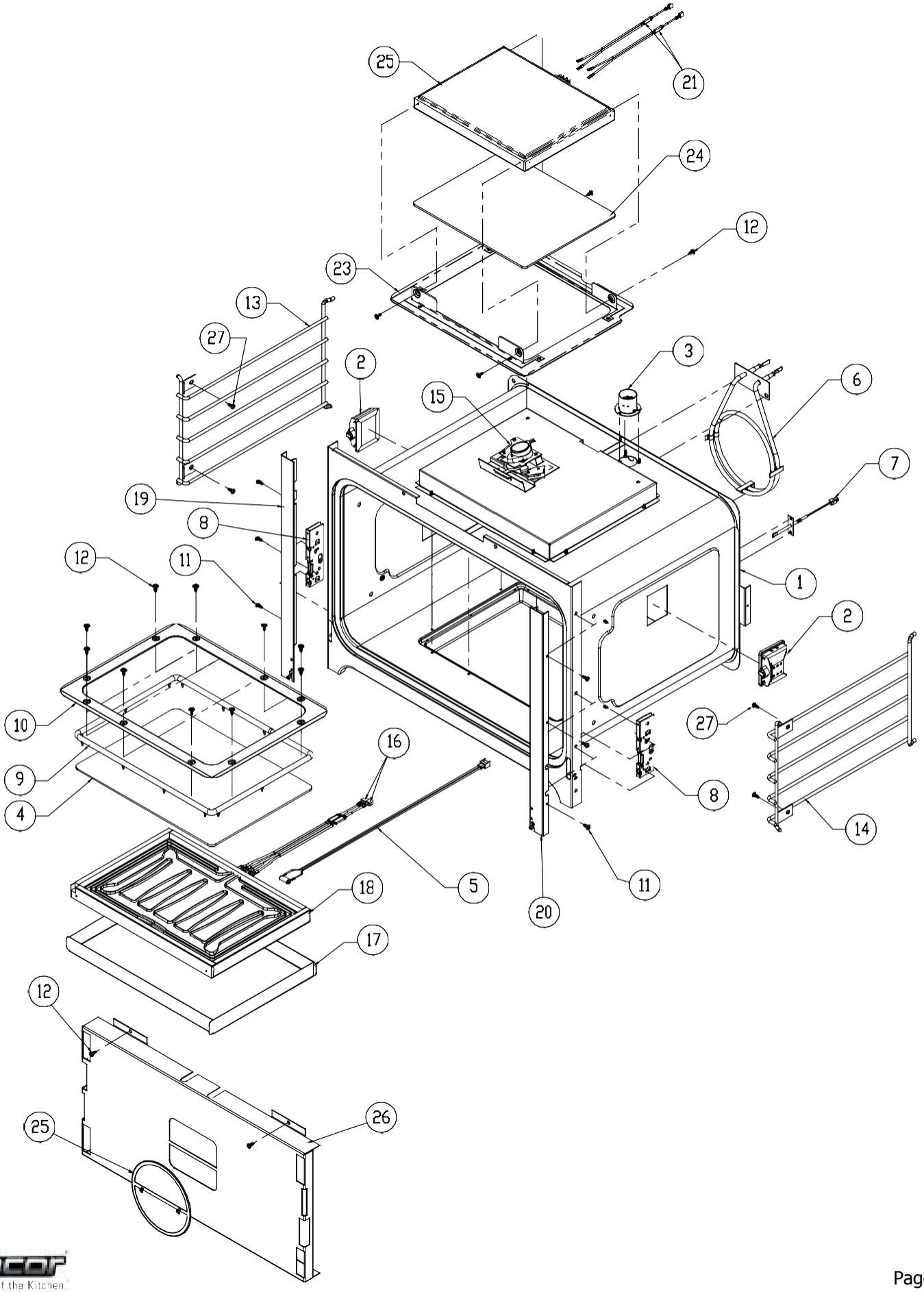

ER30D Oven Cell Parts

Item	Part #	Description
1	Non-Replaceable	Assy, Weld, Oven Cell
2	92398	Assy, Halogen Light, 20W
3	72755	Smoke Eliminator
4	101723	Ceran Bake Glass
5	72717	Meat Probe Socket
6	82377	Convection Element
7	72752	Temperature Sensor
8	701084[1]	Hinge Receptacle Kit[1]
9	101722	Bake Glass Gasket
10	101914BP	Bake Frame Weldment
11	83709	Screw, Long Washer HD, #8 x 1/2"
12	83708	Screw, TRX WFR HD, #8 x 1/2"
13	62747[2]	Rack Support, 30", Left[2]
14	62748[3]	Rack Support, 30", Right[3]
15	701169[4]	Door Latch Kit[4]
16	100591	Connector, Male, Bake/Broil
17	700532	Weld, Bake Element Tray
18	101721	Bake Element, Dual Circuit
19	700758-01	Asy, Trim, Oven Cell Front, Left
20	700758-02	Asy, Trim, Oven Cell Front, Right
21	100591	Harness, Wire
22	27849BP	Asy, Frame Broiler Glass
23	72712	Ceran Broil Glass
24	72707	Broil Element
25	82891	Filter, Convection Oven
26	701085[5]	Convection Baffle Kit[5]
27	83708	Screw, Torx, #8 x 1/2
[1]Includes set of 2 hinge receptacles		
[2]Use PN 105900-01 for Rev F units. Units built before and after this revision use PN 62747.		
[3]Use PN 105900-02 for Rev F units. Units built before and after this revision use PN 62748.		
[4]Includes 1 door latch, 2 screws and 2 spacers		
[5]Includes baffle and 4 screws		

ER30D Oven Case

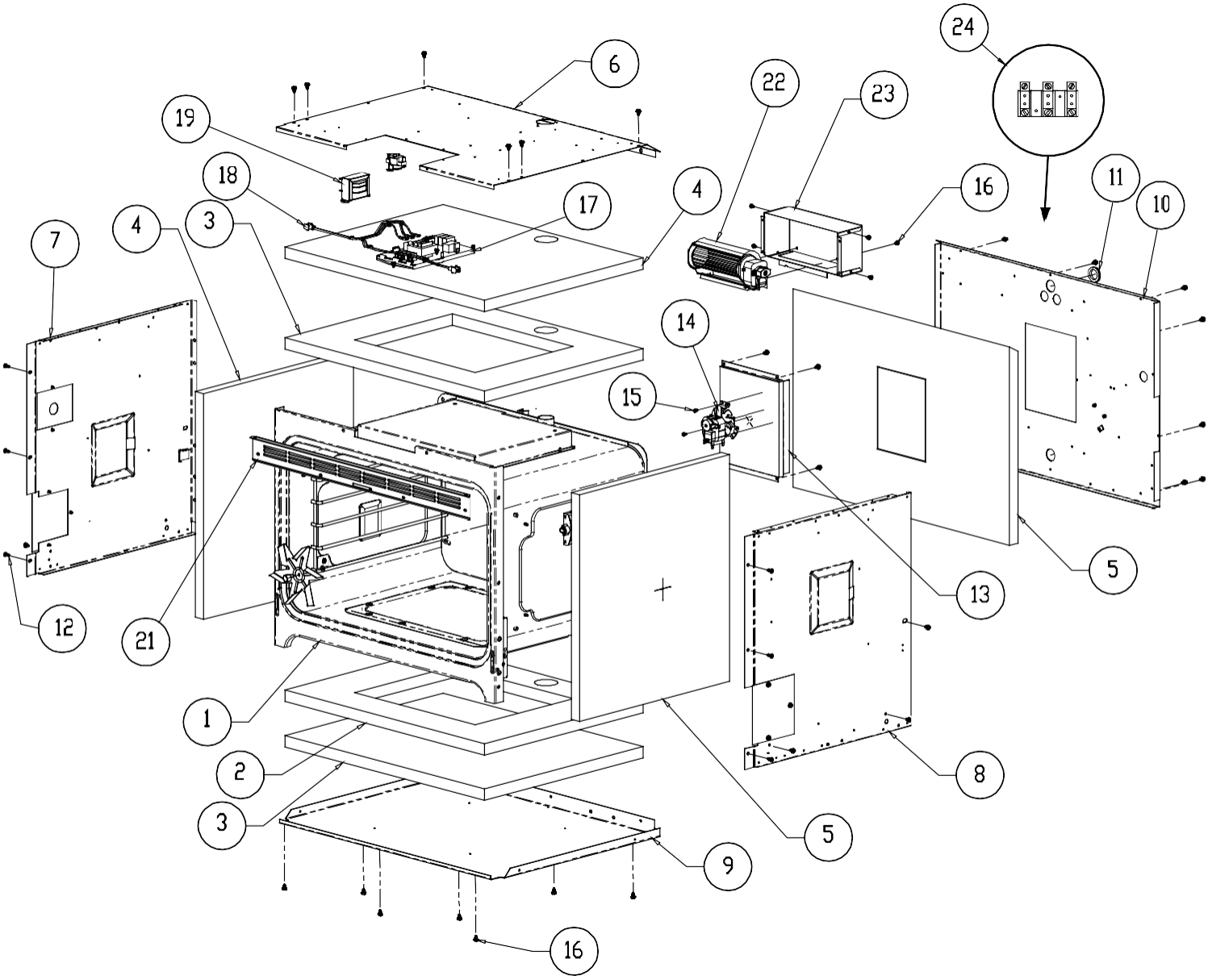

Item	Part #	Description
1	Non-Replaceable	Weld Assy, Oven Cell
2	101909	Insulation, Cell Bottom
3	101910	Insulation, Cell Top
4	80161	R/L Side Insulation
5	80166	Insulation, Cell Back
6	101037	Case Top
7	700159	Assy, Case Side, Left
8	700160	Assy, Case Side, Right
9	100466	Case Bottom
10	700715	Weldment, Case Back
11	100811	Grommet, Bake Wires
12	83709	Screw, Torx Wfr Hd, #8 x 1/2”, SS

Item	Part #	Description
13	36280	Plate, Mounting, Convection Motor
14	62101	Convection Fan Motor,
15	83019	Screw, Conv. Motor
16	83023	Screw, Slot HWH, #10 x 3/8”
17	100612	Power Board
18	100597	Harness, Light
19	62808	Transformer, Halogen Light
20	82987	Thermal Switch
21	100435B	Intake Grill
22	82347	Fan, Cooling, Gas Range
23	100690	Box, Cooling Fan
24	102384	Terminal Block

ER30D Oven Door

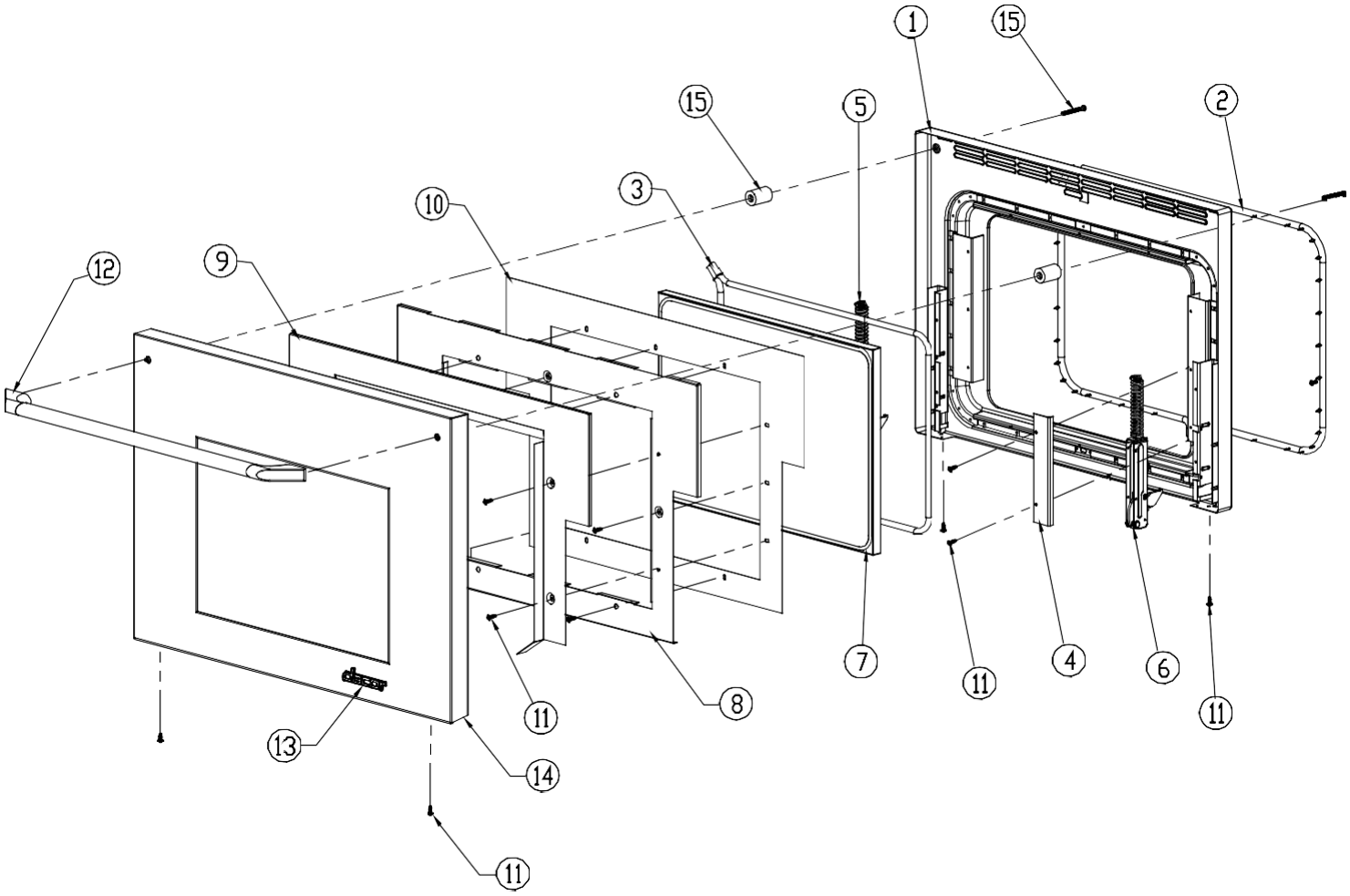

Item	Part #	Description
1	700082BP	Liner Weldment
2	100156	Liner Gasket
3	100157	Window Pack Gasket
4	36724	Hinge, Mounting Bracket Cover
5	100693	Door Hinge, Left
6	100694	Door Hinge, Right
7	72967	Window Pack
8	100154B	Inner Heat Shield
9	100155B	Outer Heat Shield
10	100312B	Lower Heat Shield
11	83709	Screw, Long Washer Head, #8 x 1/2”
12	700050	Assy, Handle
13	72511CH	Dacor Logo, Large
14	701096	Assy, Door Skin w/Logo, Service
15	701095[1]	Screw/Standoff Kit[1]
[1]Includes 2 spacers and 2 screws		

ER30D Range Base

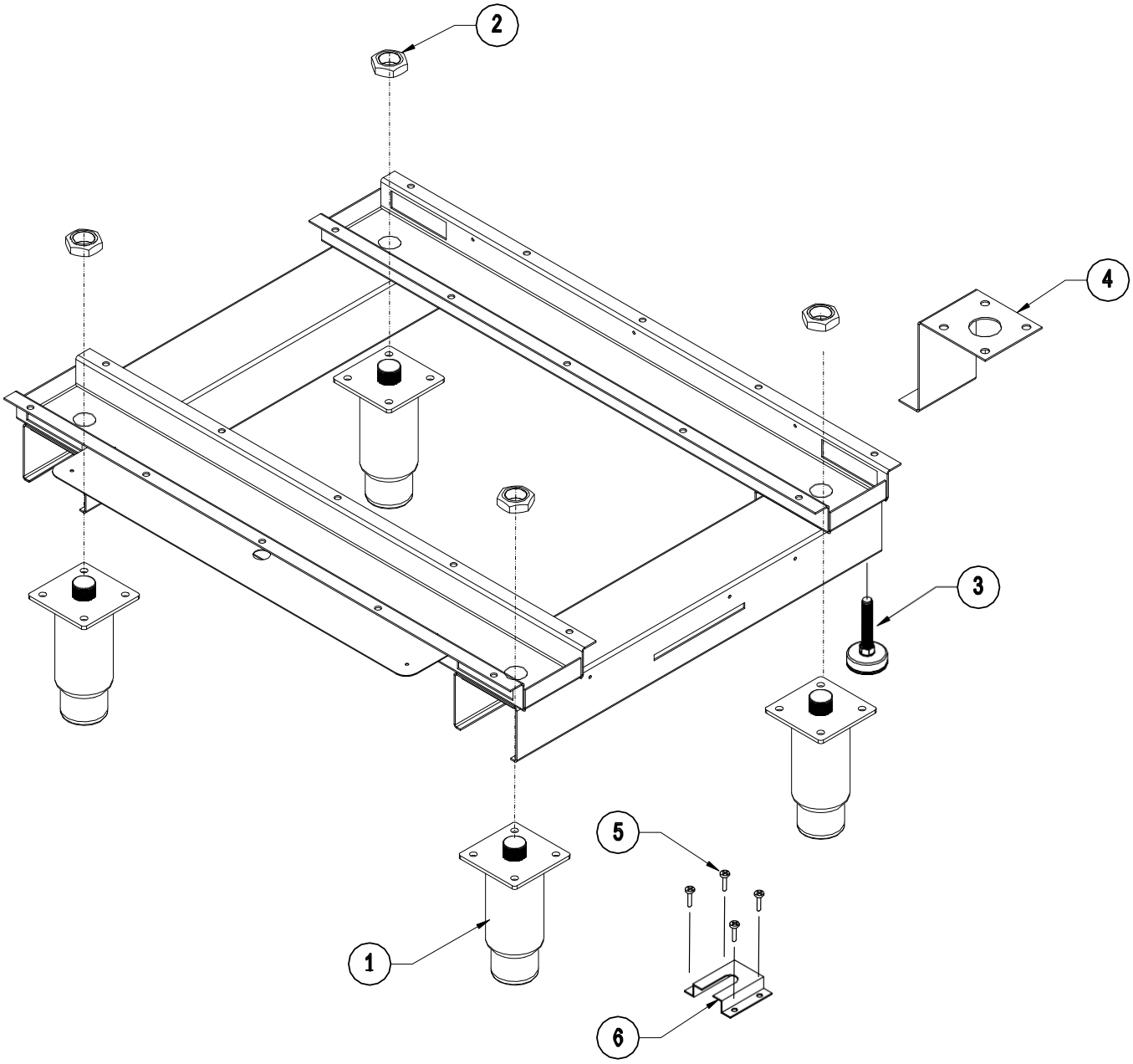

Item	Part #	Description
1	700000	Base, Leg
2	100730	Nut, Jam Hex, #10 x3/4”
3	106440	Adjustable Leveler
4	27274	Assy, Anti-Tip Bracket
5	83054	Screw, Phil, Pan Head, 6-32
6	26041	Bracket, Anti-Tip

********* PLASTIC INSERT, LEG 66813 (NOT SHOWN)*********

ER30D Miscellaneous Parts

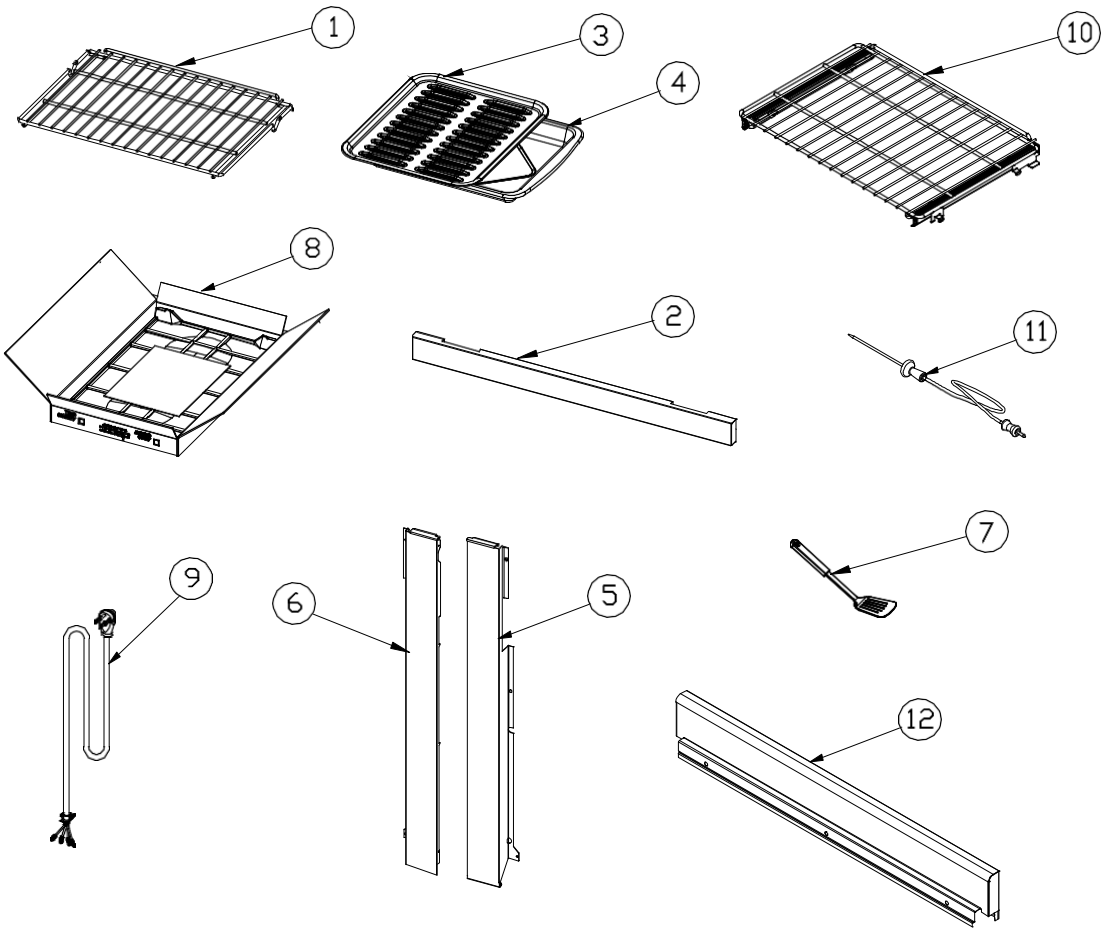

Item	Part #	Description
1	62139	Oven Rack, Standard
2	700283	Assy, Kick Plate, 30”
3	82106	Porcelain Grill
4	82107	Porcelain Pan
5	102467-02	3” Side Panel, Right
6	102467-01	3” Side Panel, Left
7	62592	Plastic Spatula
8	700570	Griddle, Boxed
9	102554-01	Assy, Power Cord, 40 Amp (Canadian units only)
10	701598-02	Oven Rack, GlideRack™ Type
11	72723	Meat Probe
12	700566-02	Assy, Backsplash, 3”
-	AERB30D6	Backguard Kit, 6” (not shown)
-	AERB30D9	Backguard Kit, 9” (not shown)