Section: HANDLES

Model: EF36BNDFSS

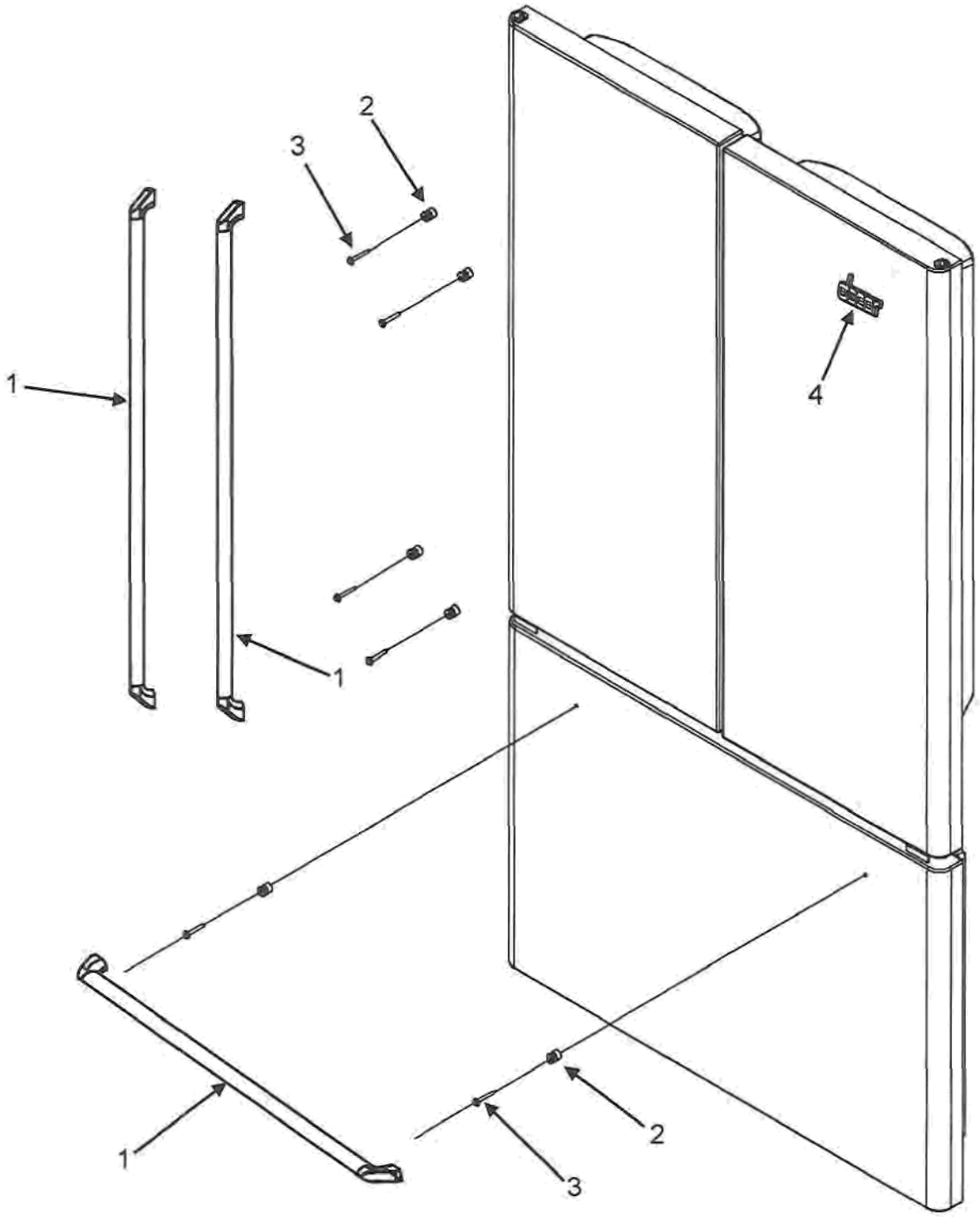

Revised 06/2013

AA44-178

EF36BNDFSS Refrigerator

Handles			
Ref #	**Whirlpool Part #**	**Dacor Part #**	**Description**
1	67006898	700823	Handle Assy., Door (STNLS) includes end caps and set screws)
	67006181	102618	Screw Set (End cap to mount)
	67006182	102619	Screw, Set (end cap to handle)
2	67006900	102620	Mount, Handle
3	67006901	102621	Screw, Mount
4	670061	7272510CH	Name Plate

Section: LEFT REFRIGERATOR DOOR

Model: EF36BNDFSS

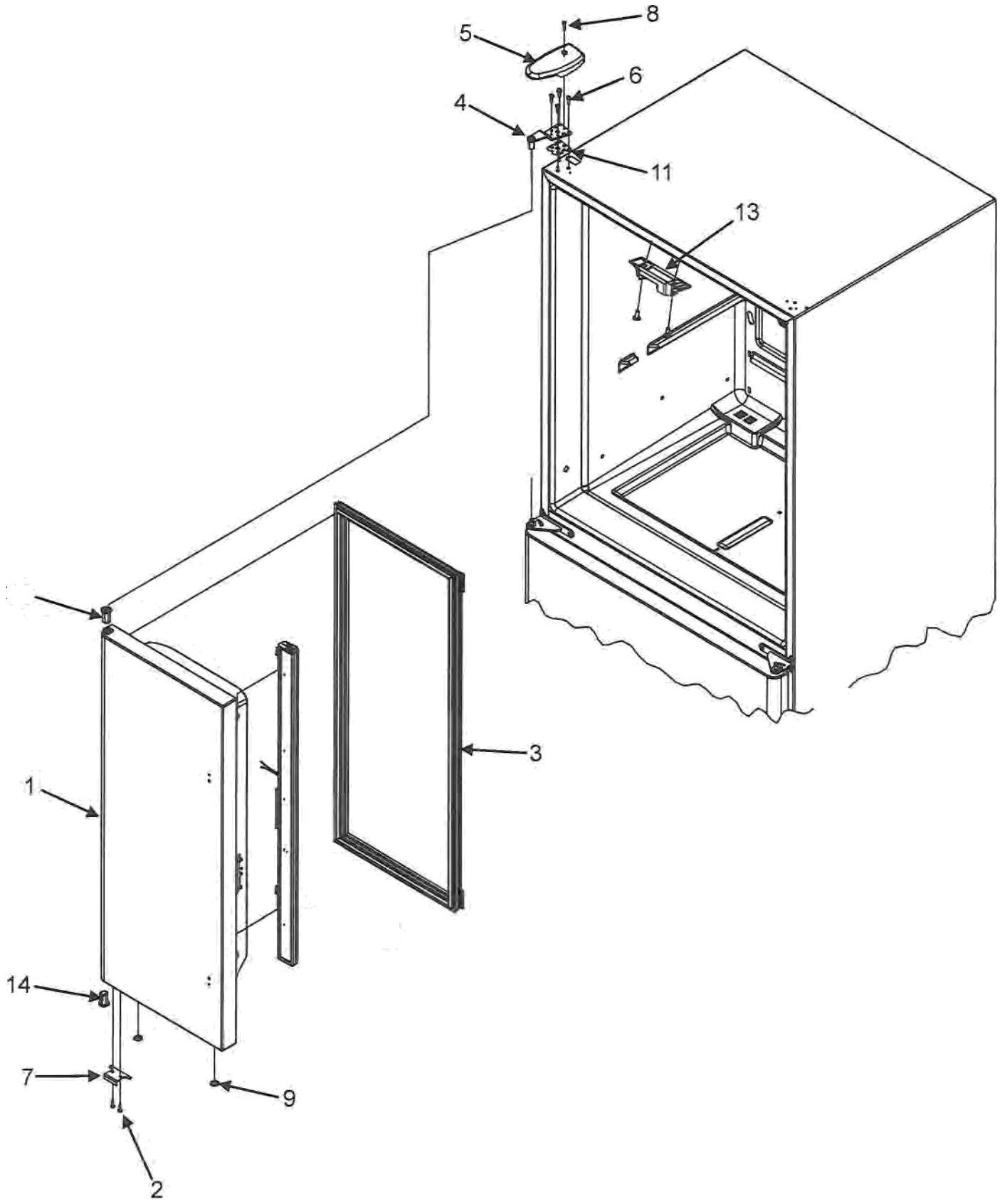

EF36BNDFSS Refrigerator

Left Refrigerator Door			
Ref #	**Whirlpool Part #**	**Dacor Part #**	**Description**
1	67006590	700824	Door Assy, LT Ref Foam (Stnls)
2	67006287	102623	Screw, Door Stop
3	67003547	102639	Gasket, French Door
4	12566603ED	102625	Hinge, Top (Black)
5	12684201B	102626	Cover, Top Hinge (LT-BLK)
6	67006303	102627	Screw, Top Hinge
7	67006276	102628	Stop, Door (BLK)
8	67006521	102665	Screw, Hinge Cover
9	67004838	102630	Plug, Vent (BLK)
10	67003264	102631	Vert Mullion Assy (BLK)
	67006786	102632	Screw, Mullion
11	12579702	102633	Shim, Top Hinge
12	12395501B	102634	Bushing, Top Door (BLK)
13	67003405	102635	Block, Pivot
	67006626	102636	Screw, Pivot Block
14	67002721	102637	Bushing, Bottom Door (BLK)

Section: RIGHT REFRIGERATOR DOOR

Model: EF36BNDFSS

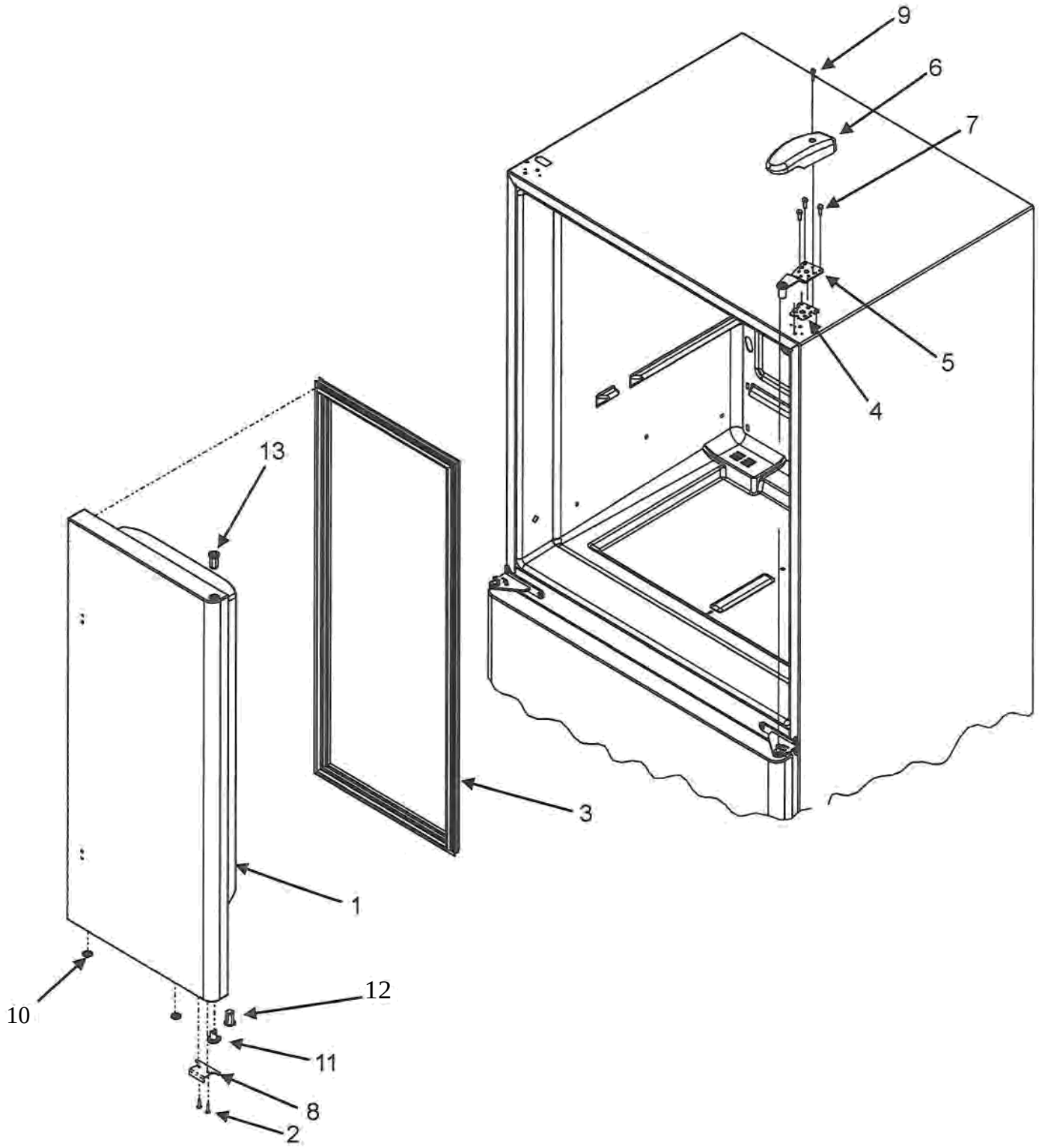

EF36BNDFSS Refrigerator

Right Refrigerator Door			
Ref #	**Whirlpool Part #**	**Dacor Part #**	**Description**
1	67006594	700825	Door Assy, RT Ref Foam (Stnls)
2	67006287	102623	Screw, Door Stop
3	67003547	102639	Gasket, French Door (BLK)
4	12579702	102640	Shim, Top Hinge
5	67001011	102641	Hinge, Top (BLK)
6	12684202B	102642	Cover, Top Hinge (RT-BLK)
7	67006303	102627	Screw, Top Hinge
8	67006276	102628	Stop, Door (BLK)
9	67006521	102629	Screw, Hinge Cover
10	67004838	102630	Plug, Vent (BLK)
11	67003639	102647	Closure, Door (BLK)
12	67002731	102648	Bushing, Bottom Door (BLK)
13	67004978	102649	Bushing, Top Door (BLK)

Section: FREEZER DOOR

Model: EF36BNDFSS

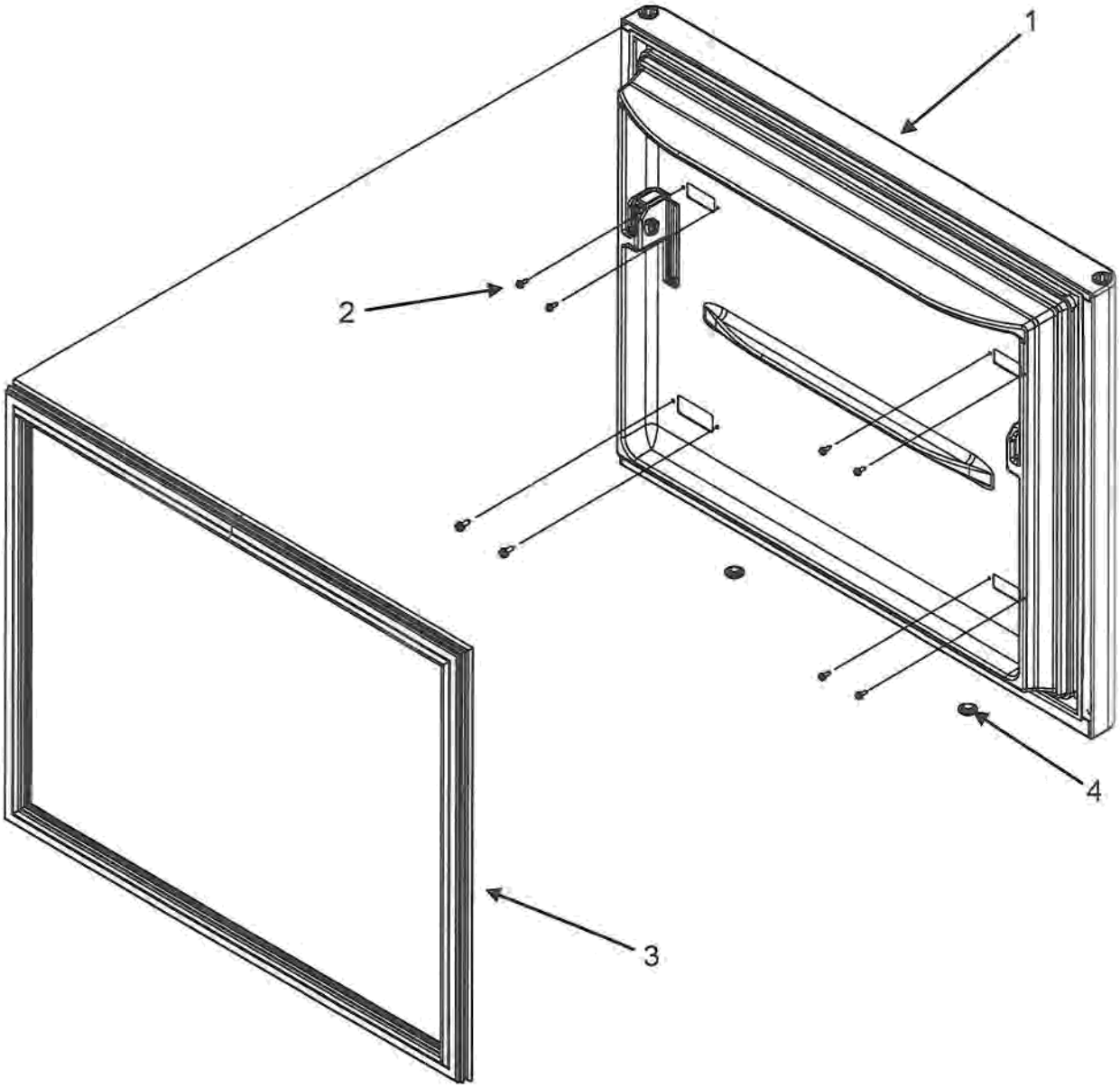

EF36BNDFSS Refrigerator

Freezer Door			
Ref #	**Whirlpool Part #**	**Dacor Part #**	**Description**
1	67006596	700826	Door Assy., Frz Foam (stainless)
2	67006408	102650	Screw, Sm Hex Head
3	67003559	102651	Gasket, FZ Door (BLK)
4	67004838	102630	Plug. Vent (BLK)

Section: REF DR STORAGE & CENTER HINGES

Model: EF36BNDFSS

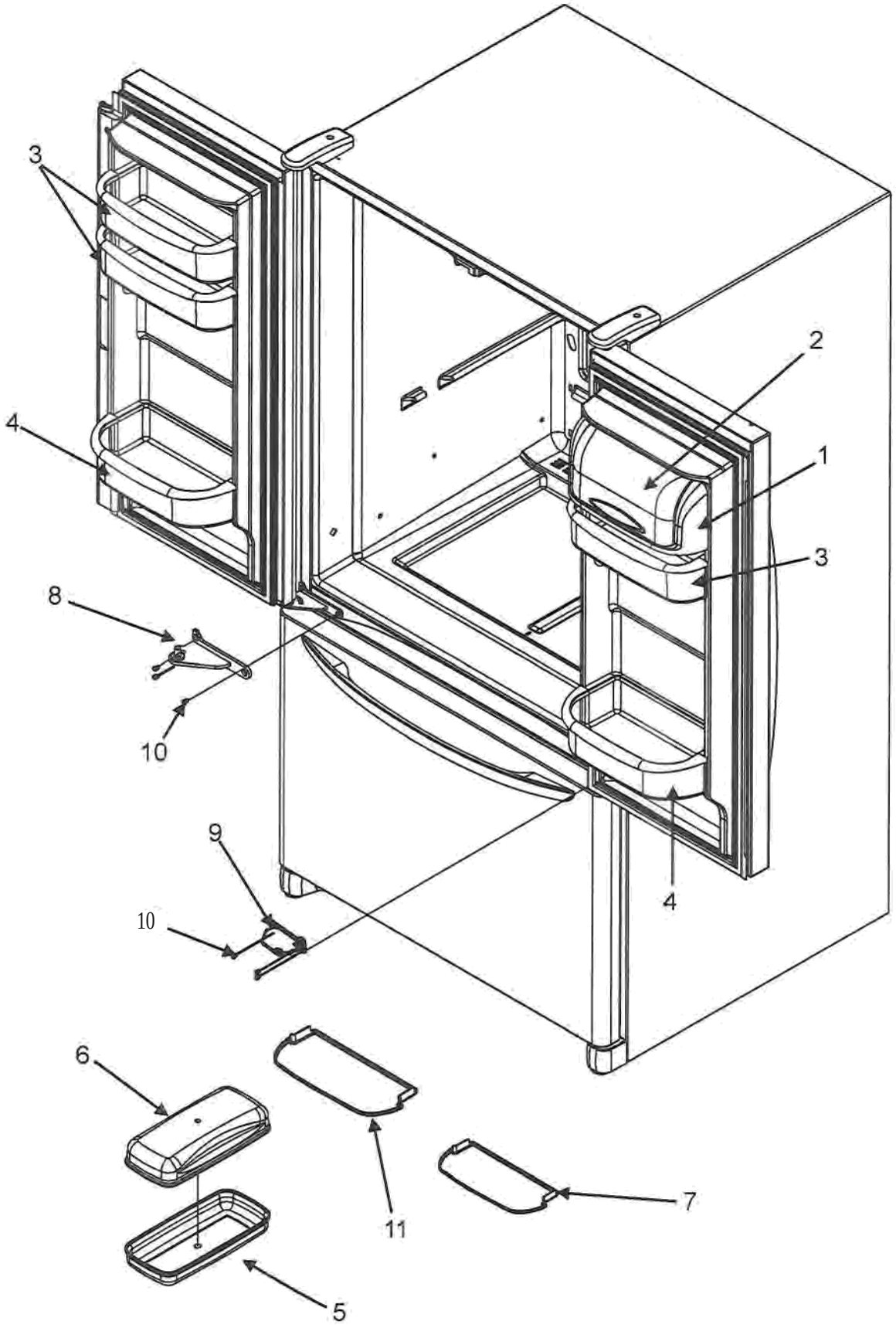

EF36BNDFSS Refrigerator

Ref Door Storage and Center Hinges			
Ref #	**Whirlpool Part #**	**Dacor Part #**	**Description**
1	67001279	102653	Tray, Dairy
2	67003637	102654	Door, Dairy
3	67003775	102655	Bucket, Ref DR (MED)
4	67005258	102656	Bucket, Ref DR (GAL)
5	67004404	102657	Tray, Butter
6	67004405	102658	Lid, Butter Tray
7	67006906	102659	Gripper, (Med)
8	67006442	102660	Hinges, Center (LT-BLK)
9	67006443	102661	Hinge, Center (RT-BLK)
10	67006380	102662	(Screw, Center Hinge)
11	67006907	102663	Gripper, (GAL)

Model: EF36BNDFSS

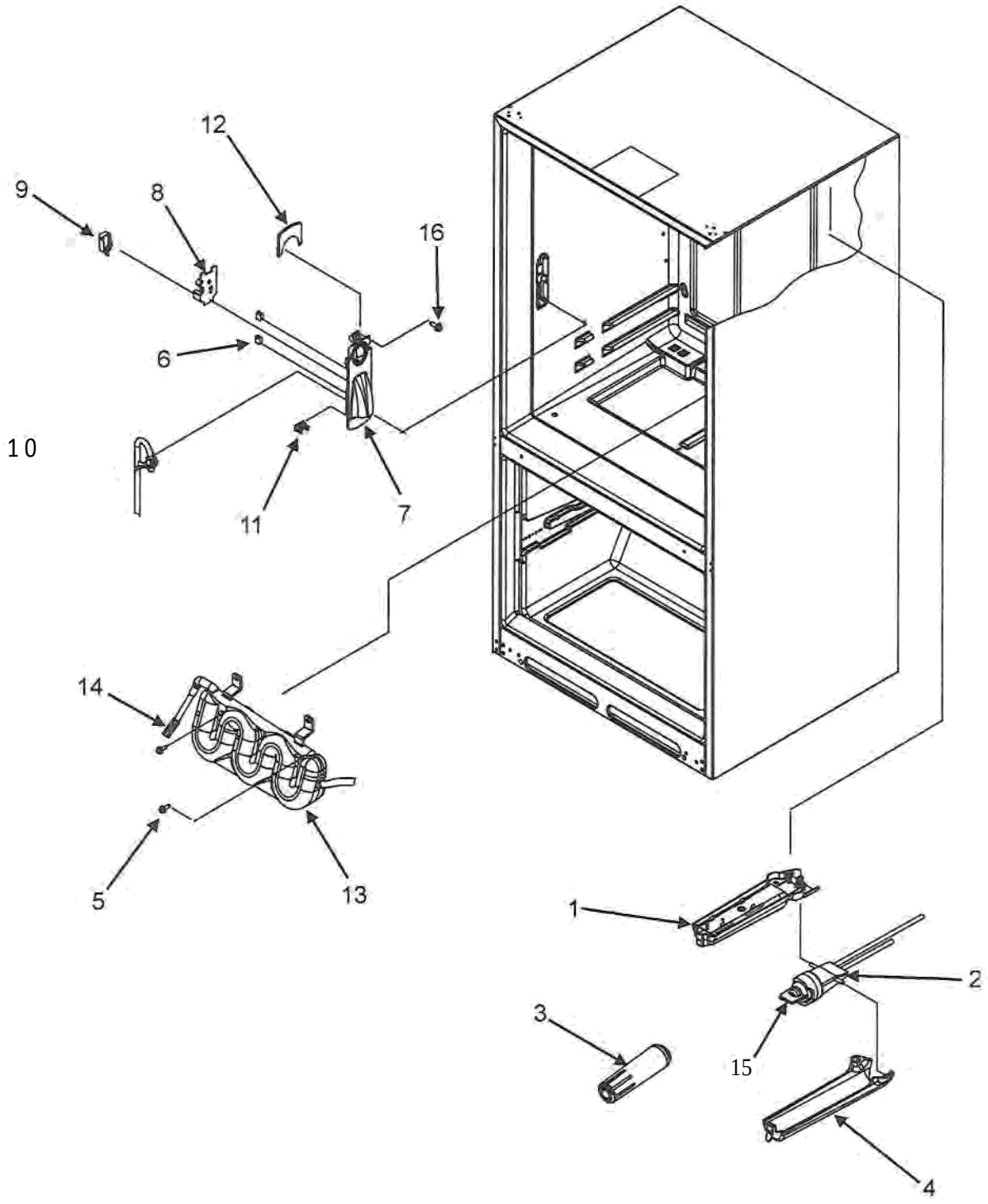

EF36BNDFSS Refrigerator

Water Dispenser/Water Filter/Water Tank			
Ref #	**Whirlpool Part #**	**Dacor Part #**	**Description**
1	67001668	102664	Plate, Filter Backing
2	67006524	102665	Head, Water Filter (W/Tubing)
3	67006469	102666	Filter, Water (Generic)
4	12568001	102667	Cover, Filter
5	67006287	102623	Screw, Water Tank
6	B8390302	102669	Clip, Façade
7	67002979	102670	Façade, Dispenser
8	67002742	102671	Plate, Switch
9	12575501	102672	Switch, Limit
10	67003728	102673	Guide, Water Line
11	67002816	102674	Clip, Waterline
12	67006909	102675	Façade, Dispenser Top
13	67004091	102676	Tank, Water
14	61006182	102677	Union, Tube (5/16" - 5/16")
15	12664501	102678	Plug, Bypass
16	67006400	102679	Screw, SM

Model: EF36BNDFSS

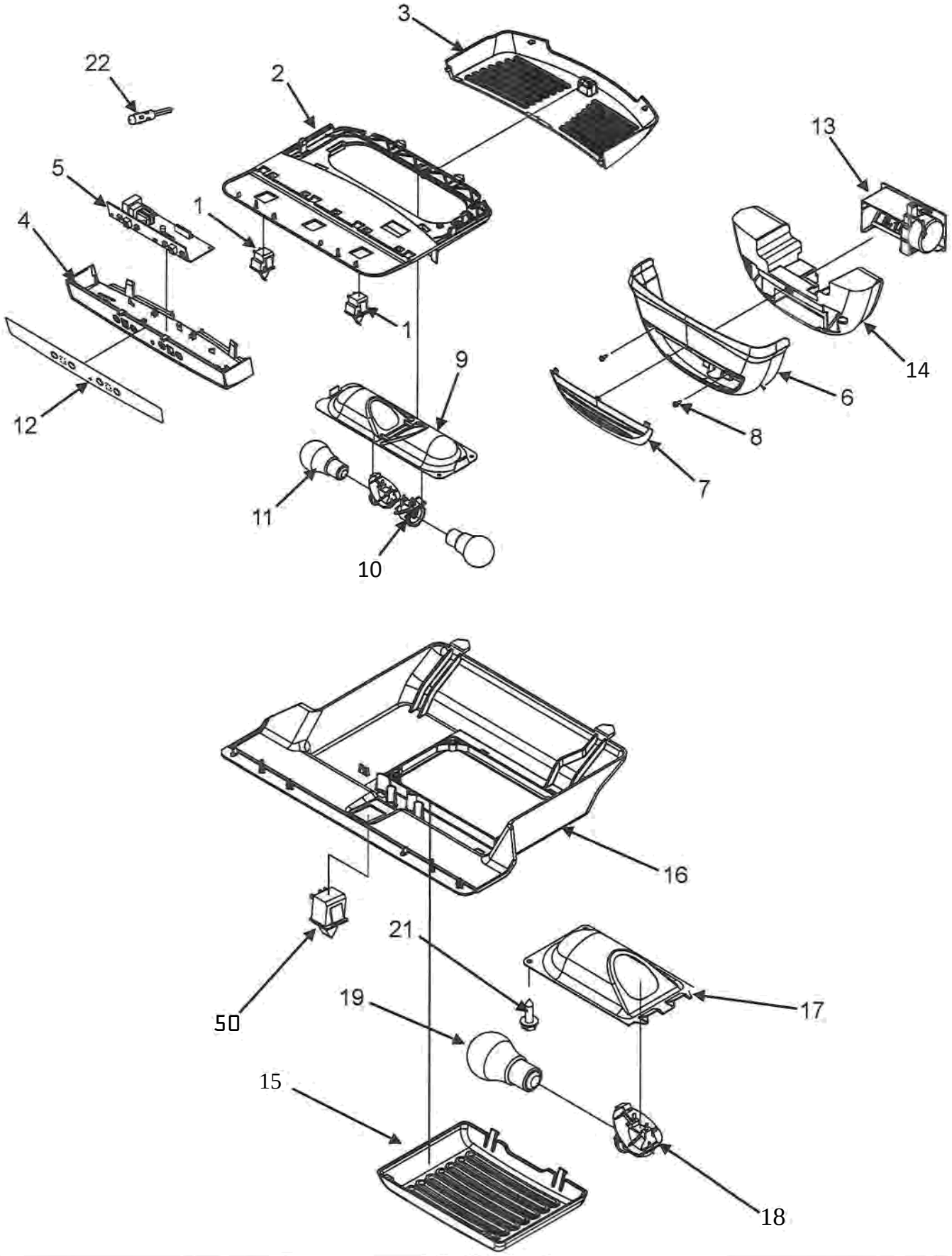

EF36BNDFSS Refrigerator

Controls			
Ref #	**Whirlpool Part #**	**Dacor Part #**	**Description**
1	C3680310	102680	Switches, Light
2	67004078	102681	Module, Light
3	67003897	102682	Cover, Ref Light
4	67005444	102683	Module, Ref Control
5	67005397	102684	Control Board
6	67003899	102685	Board, Damper
7	67003900	102686	Insert, Damper Cover
8	67006602	102687	Screw, Damper Base
9	67003901	102688	Housing, Light
10	12570701	102689	Socket, Light
11	67003883	102690	Bulb, Light
12	67006910	102691	Keyboard Control
13	67006116	102692	Damper, Elec Control
14	67006604	102693	Insulation, Damper Control
15	67003905	102694	Cover, FZ Light
16	67003906	102695	Module, FZ Control
17	67001035	102696	Housing, Light
18	12570701	102697	Socket, Light
19	67003883	102690	Light Bulbs
20	67005653	102699	Switch, Light/Intlk
21	67006530	102700	Screw, Housing
22	12002356	102701	Thermistor Kit
	67005417	102702	Harness FF Control
	67006094	102703	Harness FZ Module

Section: REFRIGERATOR SHELVING

Model: EF36BNDFSS

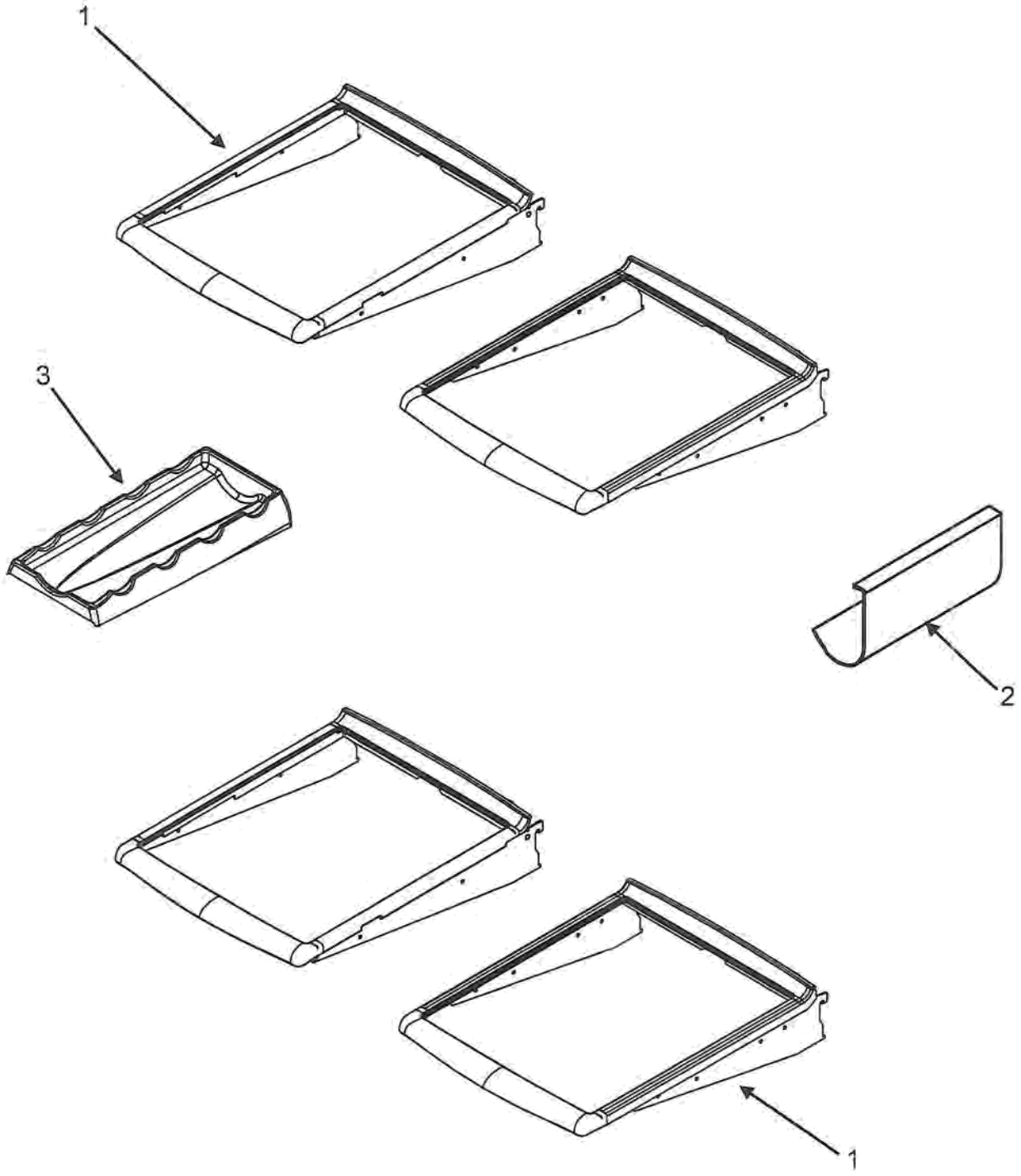

EF36BNDFSS Refrigerator

Shelves			
Ref #	**Whirlpool Part #**	**Dacor Part #**	**Description**
1	67003169	102704	Shelf Glide out
2	10448903	102705	Rack, Bottle
3	67001656	102706	Bottle, Trivet
4	67005864	102707	Slide, Humidity Control
5	67002659	102708	Pan, Crisper
6	67006911	102709	Extr, Crsp Frnt
7	67002488	102710	Brace, Crisper

Model: EF36BNDFSS

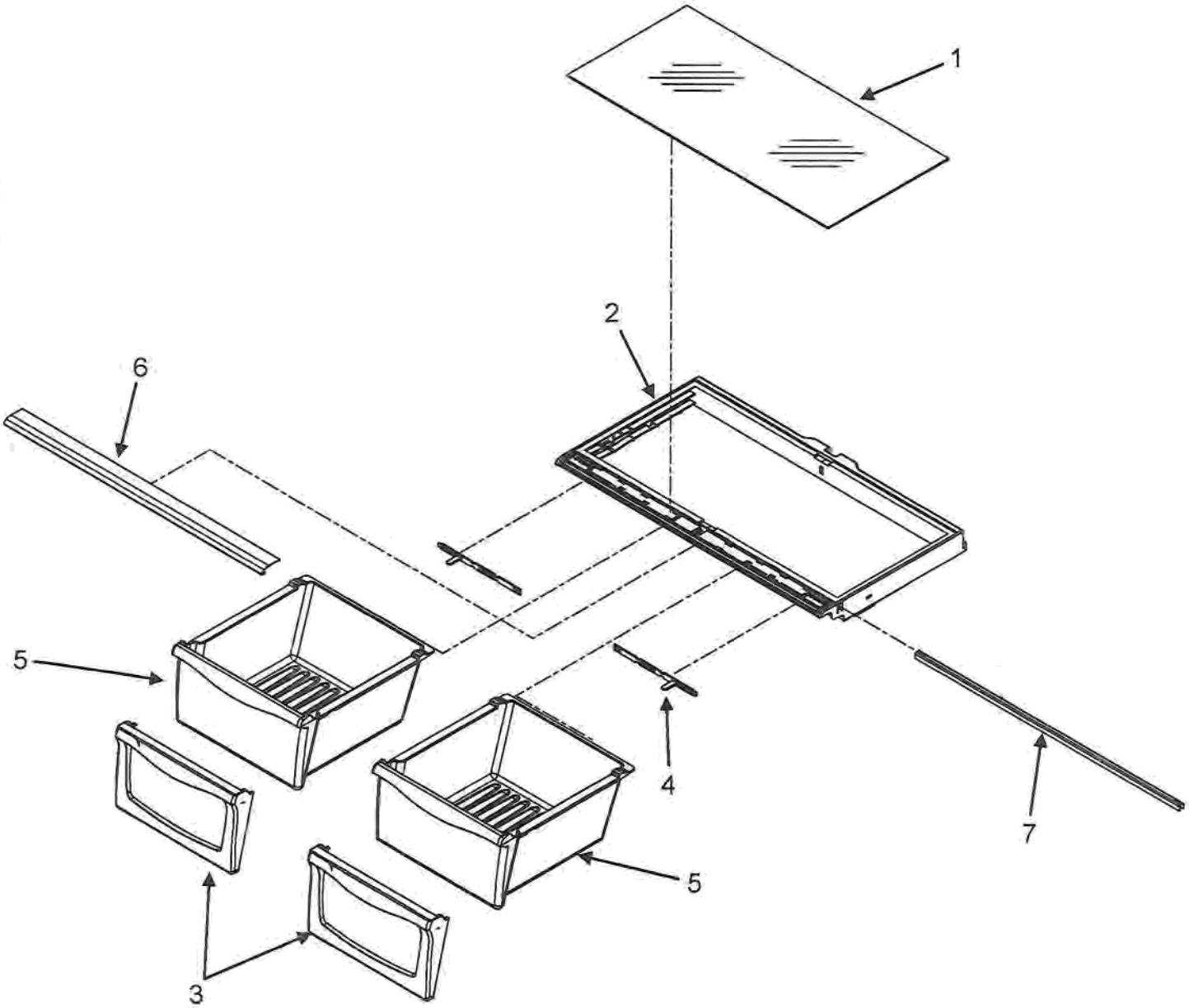

Section: **CRISPER ASSEMBLY** P/N **16027210**

EF36BNDFSS

Mm	PARTTWflWEER	DESCRIPTION	#SEE BELOW	1	2	3	4	5
		GLASS, CRISPER	10	1				
2	67006185	FRAME, CRISPER	10	1				
3	67005909	FRONT, CRISPER PAN	10	2				
		SLIDE, HUMIDITY CONTROL	10	2				
		PAN, CRISPER	10	2				
6	67006911	EXTR, CRSP FRNT	10	1				
7	67002488	BRACE, CRISPER	10	1				

Section: PANTRY ASSEMBLY

Model: EF36BNDFSS

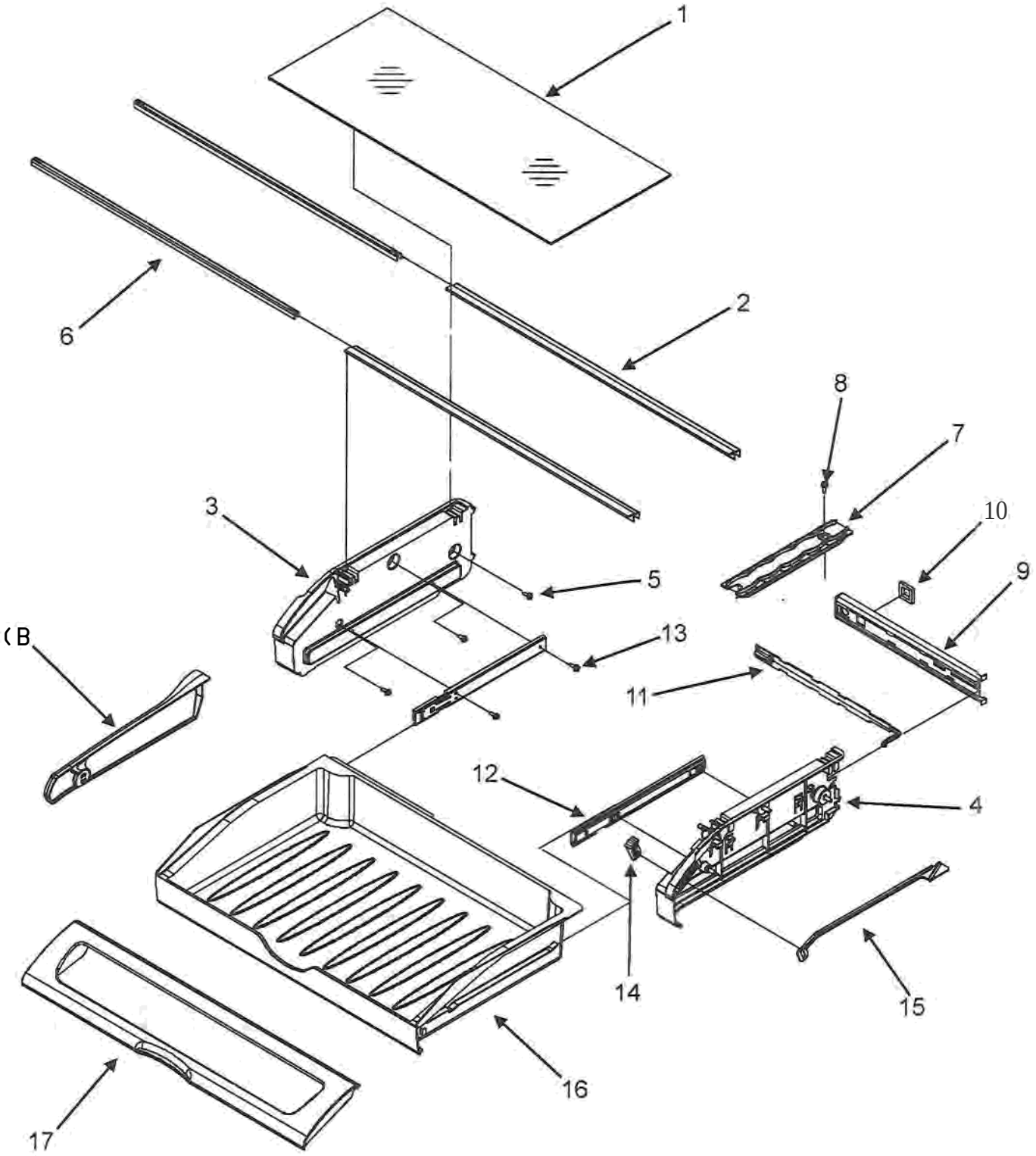

EF36BNDFSS Refrigerator

Pantry Assembly			
Ref #	**Whirlpool Part #**	**Dacor Part #**	**Description**
1	67002332	102711	Glass, Pantry
2	67006010	102712	Extr, Glass Support
3	67005862	102713	End Cap, Pantry (LT)
4	67006912	102714	End Cap, Pantry (RT)
5	67006415	102715	Screw, End Cap
6	67002330	102716	Brace, Pantry
7	67001719	102717	Track, Deli Drawer
8	67006400	102679	Screw, Track
9	67005625	102719	Housing Control
10	67002329	102720	Gasket, Pantry
11	67003793	102721	Slide, Temp Control
12	67006219	102722	Glide, Pantry Drawer
13	67006287	102623	Screw, Glide
14	67003791	102724	Knob, Temp Control
15	67003794	102725	Bar, Temp Control
16	67003530	102726	Drawer, Pantry
17	67005899	700827	Lid Assy, Pantry
18	67002321	102766	Divider, Pantry

Model: EF36BNDFSS

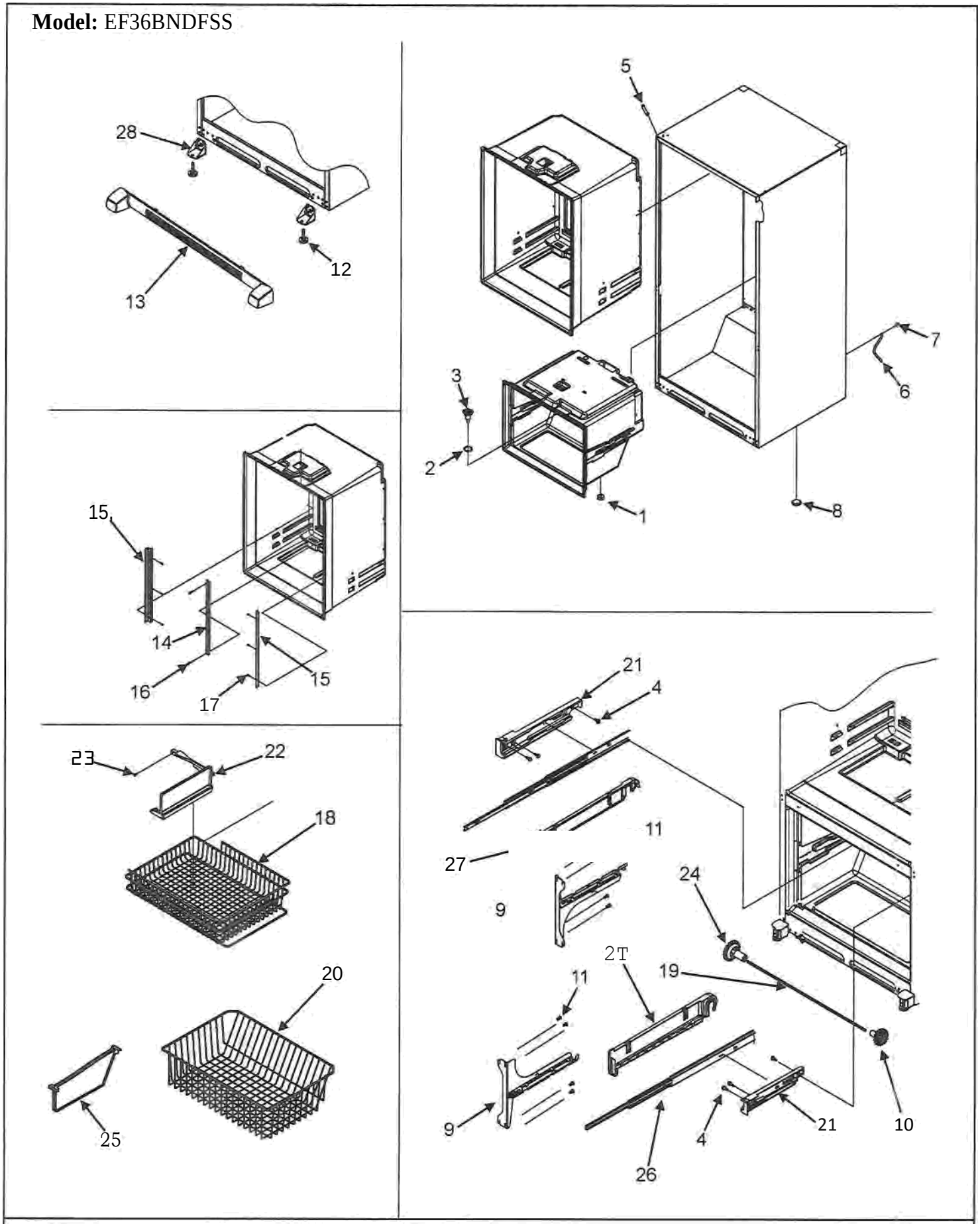

Section: INTERIOR CABINET/FRZ SHELVES/TOE GRILLE

EF36BNDFSS

J'to. PABT NUMBER	DESCRIPTION	#SEE BELOW	1	2	3	4	5
1 B8381501	GASKET, DRAIN TUBE	10	1				
2 M0500703	SEAL, O RING	10	1				
	FUNNEL, DRAIN	10	1				
6	SCREW, ADAPTER	10	6				
	COVER, CORNER (BLK)	10	2				
	TUBE, DRAIN	10	1				
067	CLIP, DRAIN TUBE	10	1				
76901	PLUG, BUTTON	10	1				
9 67004732	BRACKET, DRAWER SLIDE (LT)	10	1				
67004733	BRACKET, DRAWER SLIDE (RT)	10	1				
10 67004430	GEAR (RT)	10	1				
	SCREW, BRACKET	10	8				
	BRAKE, FOOT	10	2				
	GRILLE, TOE (BLK)	10	1				
	CLIP, TOE GRILLE	10	2				
	_____)	10	1				
9	_____ /RT)	10	2				
0	SCREW,	10	2				
0	SCREW, LT/RT RAIL	10	6				
	BASKET, FRZ. (UPR)	10	1				
	SHAFT, RACK	10	1				
	BASKET, FRZ. (LWR)	10	1				
	ADAPTER (LT)	10	1				
	ADAPTER (RT)	10	1				
	DIVIDER, BASKET (UPR)	10	1				
	SCREW, DIVIDER	10	1				
24 67004429	GEAR (LT)	10	1				
25 67004812	DIVIDER, BASKET (LWR)	10	1				
26 6700691S	SLIDE, DRAWER	10	2				
	CRADLE, BASKET (LT)	10	1				
	CRADLE, BASKET (RT)	10	1				
2)) 670OS112	BRACKET, FOOT CABINET	10	2				
	SCREW, BRACKET	10	8				

Model: EF36BNDFSS

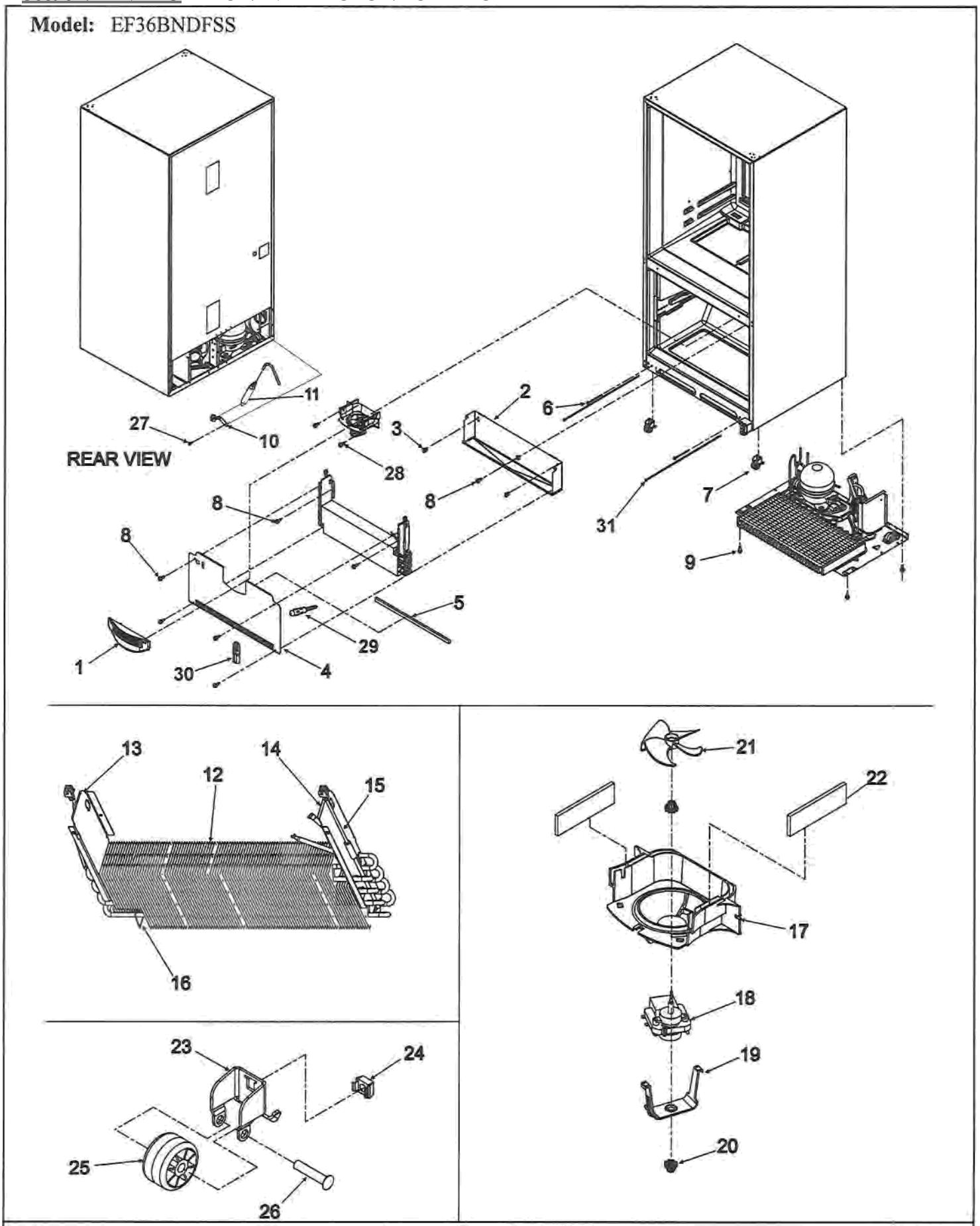

EF36BNDFSS Refrigerator

Evaporator/Evap Motor/Rollers			
Ref #	**Whirlpool Part #**	**Dacor Part #**	**Description**
1	67006609	102760	Grille, FZ Air
2	67002490	102761	Drip Tray
3	10623002	102762	Clip, Evaporator
4	67005873	102763	Cover-Evap
5	67002492	102764	Gasket
6	67006611	102765	Screw, Roller Adjust
7	67002227	700828	Roller Bracket Assy
8	67006425	102767	Screw
9	67006573	102768	Screw
10	10547002	102769	Drier Clip
11	B2150504	102770	Drier Clip
12	12002041	102771	Evaporator Kit (Includes Heat Shield, Evap and Instruction Sheet)
13	67001083	102772	Dam, Left Return
14	67001084	102773	Dam, Right Return
15	67002493	102774	Heater Evaporator
16	10428101	102775	Clip, Evap Heater
17	67002777	102776	Shroud, Evap Fan
18	67003636	102777	Motor, Evap Fan
19	67005633	102778	Clip, Evap Motor
20	67002780	102779	Grommet Fan Motor
21	12217201	102780	Fan, Evap Motor
22	67001291	102781	Foam Gasket
23	12456801	102782	Roller Bracket
24	M0286708	102783	Nut, Speed
25	67005127	102784	Roller
26	M1205302	102785	Rivet
27	67006737	102786	Screw, Clip
28	67006287	102623	Screw, Fan Assy
29	12002356	102788	Thermistor Kit
30	67003924	102789	Cover, FZ Thermistor
31	67006697	102790	Screw, Adjusting (Rod)
	67003426	102791	Thermostat, Defrost
	67005574	102792	Harness, Evap Heater

Model: EF36BNDFSS

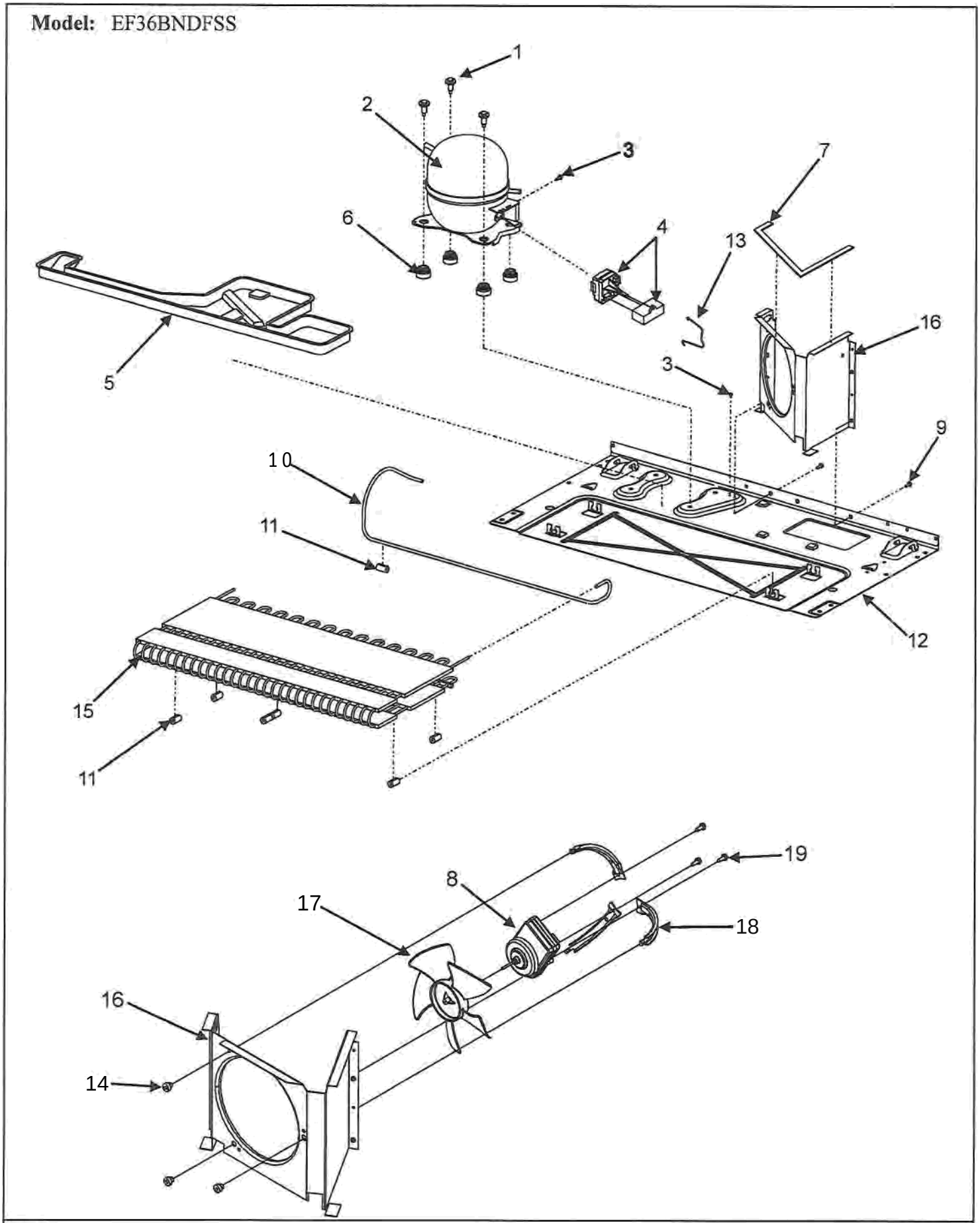

EF36BNDFSS Refrigerator

Compressor and Cond Motor			
Ref #	**Whirlpool Part #**	**Dacor Part #**	**Description**
1	67006432	102793	Screw, Compressor
2	12002634	102829	Compressor Kit (includes Compressor, Overload, Relay W/Capacitor, Grommets and Bale Strap)
3	67006433	102794	Ground Screw
4	67005560	102795	Overload/Relay w/Compressor
5	67004464	102796	Pan Drain
6	67003493	102797	Grommet Compressor
7	61003210	102798	Seal, Cond Shroud
8	67004432	102799	Motor, Condensor Pan
9	67006425	102767	Screw, SM
10	67004700	102801	Discharge Tube
11	67005680	102802	Condensor Grommet
12	67005889	102803	Pan Base
13	12576801	102804	Bale Strap
14	61004743	102805	Grommet Bracket
15	67006131	102806	Condensor
16	67001090	102807	Shroud, Condensor Fan
17	67004952	102808	Blade, Condensor Fan
18	67004953	102809	Bracket, Condensor Motor
19	67004954	102810	Screw, Bracket
	67005435	102811	Harness, MC

Section: CABINET BACK

MoiJel: EF36BNDFSS

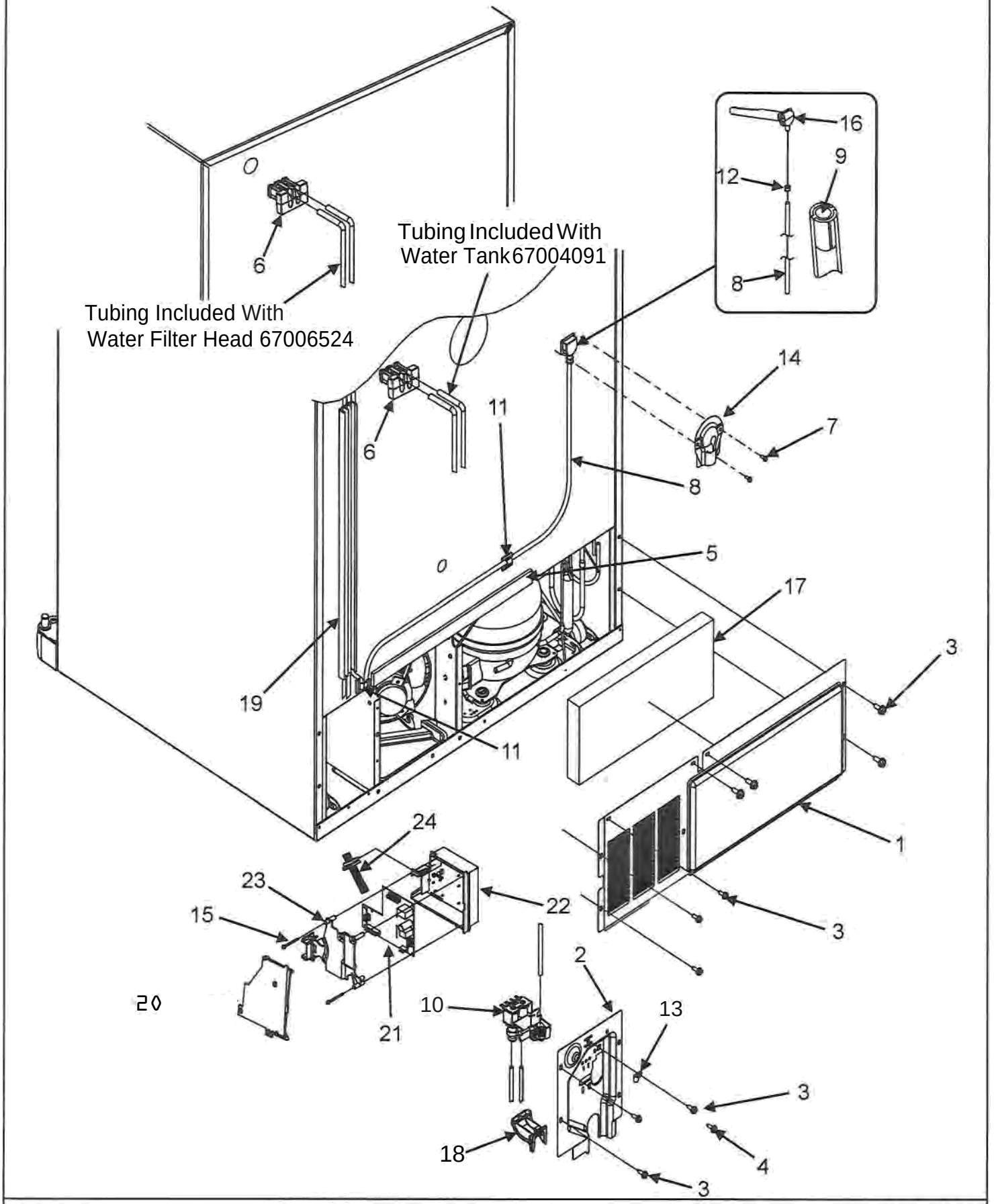

EF36BNDFSS Refrigerator

Cabinet Back			
Ref #	**Whirlpool Part #**	**Dacor Part #**	**Description**
1	67006101	102812	Cover MC Back
2	67004098	102813	Cover, Water Valve
3	67006425	102767	Screw, Cover
4	67006662	102815	Screw, Valve
5	B5759649	102816	Gasket, MC Back
6	67004092	102817	Block, Filter
7	67006287	102623	Screw, Cover
8	67003729	102819	Tube, Plastic
9	A3223101	102820	Insert, Plastic Tube
10	67006531	102821	Valve, Dual Water
11	M0104106	102822	Clip, Cord
12	M0114003	102823	Clip, Speed
13	M0108105	102824	Clamp, Tube
14	67003331	102825	Cover, Water Line
15	67005420	102826	Screw, HV Box
16	10463201	102827	Elbow, Fill Tube
17	67003796	102828	Acoustic Fiber
18	67004101	102829	Sweep, Dual Tube
19	67004102	102830	Waterline Track
20	67005421	102831	Cover, HV Box
	67006615	102832	Screw, Cover
21	67006829	102833	Board, HV Control (Incl. inst Sheet)
22	67004969	102834	Box, HV Control
23	67005418	102835	Spacer, HV Box
24	67005419	102836	Harness, HV Board
	67006506	102837	Cord, Power

Model: EF36BNDFSS

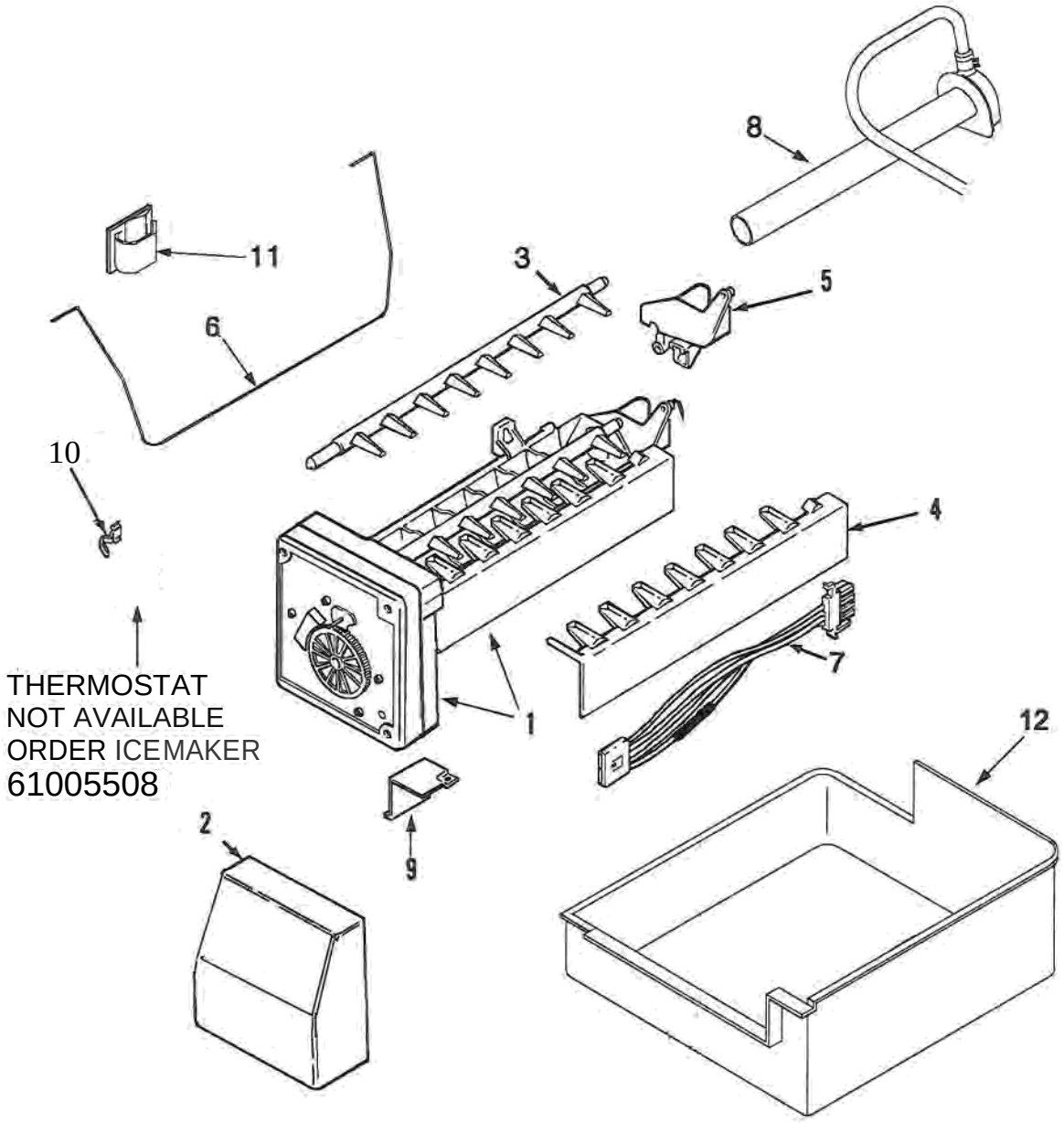

EF36BNDFSS Refrigerator

Ice Maker			
Ref #	**Whirlpool Part #**	**Dacor Part #**	**Description**
1	61005508	700830	Ice Maker Assy
	67002823	102838	Brkt, Ice Maker
	67006287	103623	Screw, Ice Maker
2	67004710	102840	Cover, Ice Maker
3	95101-1	102841	Ejector, Ice
4	95102-1	102842	Stripper, Ice
5	95100-1	102843	Inlet, Water
6	67004028	102844	Arm, IM Shutoff
7	67006614	102845	Harness, Ice Maker
8	10463201	102846	Elbow, Fill Tube
9	95107-01	102847	Bracket, Module & Heater
	95108-1	102848	Screw, Bracket
10	95104-1	102849	Thermostat, Retainer
11	M0104106	102822	Clip Cord
12	67001255	102851	Ice Pan
	10244904	102852	Coupling
	R0131235	700831	Ice Maker Hook-up kit includes 1/4 OD X 25' Copper Tubing, Saddle Valve (Non Piercing) and 1/4" OD Compression Nut and Sleeve